MFG: AQUATIC AMUSEMENT
NAME: WAVE GENERATOR
EQUIP.
TYPE: NON-KIDDIE

WAVE GENERATION EQUIPMENT

SAFETY-MAINTENANCE-OPERATING INSTRUCTIONS

RAPIDS WATERSLIDE
WEST PALM BEACH, FLORIDA

AQUATIC
AMUSEMENT
ASSOCIATES, LTD.
One of the Aquatic Development Group of companies.

P.O. Box 648
One Aquatic Center
Cohoes, New York 12047
Phone 518-783-0038 FAX 518-783-0474

Just as wind makes waves on the ocean, mechanically created wind in the form of air pressure makes the waves in this pool.

And, just as shallowing water near beaches convert rolling ocean waves into whitecaps, breakers and surf; the same effect is achieved in this pool by the scientific design of the bottom and the flaring of the sidewalls to create an expanded circular beach area.

The deep-end wall has an opening it's full length extending downward from about three feet below water surface to allow free flow of water into an adjacent water reservoir enclosed with heavy reinforced concrete walls and top. It is divided into sections, each separate section having an opening at the top to receive the tornadoes of compressed air which is forced into these openings. This wind, or air pressure, quickly forces the water in that section downward and outward through the opening in the pool wall and this explosion of water into the deep-end of the pool creates a wave.

This machinery is mounted in a sound-proof room next to the water reservoirs in which the waves are created. It consists of electric motors directly connected to air compression fans. These fans are either directly connected or connected via a common plenum to the air directional valves which discharge air into the chambers (caissons) in the water reservoir. The air directional valves are pneumatically activated with compressed air from the pneumatic compressor assembly. The controls and motor starters are housed in the motor control center just outside the sound-proof room.
control center just outside the sound-proof room.

The system is completely automated through pneumatic and electric controls.

The AQUAWAVE/WAVETEK wave generating equipment consists basically of a motor control center, an air compressor assembly, 1 (one) motor driven wave generators, 2 (two) pneumatically driven air directional valves and lifeguard stop and stop/start stations.

The motor control center consists of a solid state reduced voltage starter complete with individual circuit breakers, individual motor overloads and an electronic control panel.

The Electronic Control Panel is the "brain center" of the AQUAWAVE/WAVETEK system. It controls the ringing of the bell to signal the starting of the waves, the internal timing system, the highly accurate timing logic of the air directional valve movement and the starting of the wave generators.

Located on the door of the electronic panel is (1) the indicators to monitor the status of the wave generators, the compressor unit and the movement of the air directional valves; (2) the internal timing system; and (3) the system control switches used to initiate and to shutdown system operation.

The pneumatic assembly consists of a 10 horsepower air compressor, shut off valve, pressure relief valve, piping to the air directional valve, and a pneumatic filter, regulator, and lubricator assembly. The assembly provides the power to operate the air directional valves.

The motor driven wave generator consist of a 25 horsepower motor and a direct coupled fan. The high volume of air generated by the fan is directed to the air directional valves.

The pneumatically driven air directional valves channel the air from the wave generators to the proper caissons. The movement of the air directional valves is via pneumatic cylinders, which are ultimately controlled by the timing logic system in the electronic control panel.

The lifeguard stop and start/stop stations are used by the lifeguards for shutting down the AQUAWAVE/WAVETEK system in case of an emergency and for starting the system again.

GENERAL WAVE POOL

(Recommended By Ellis & Associates)
(Consultants for Aquatic Safety)

-Lifeguards should receive specialized training designed to protect swimmers (THIS TRAINING IS NOT PROVIDED IN CONVENTIONAL LIFESAVING COURSES). It is therefore recommended that lifeguards employed to protect wave pools be certified in the National Pool & Waterpark Lifeguard Training Program (NPWLTP).

-Lifeguards should be in a STANDING position at all times that waves are being produced but may sit when waves are not being produced. For conventional wave pools, a MINIMUM REST PERIOD of five(5) minutes should take place after each wave-producting cycle. Wave producing cycles SHOULD NOT EXCEED fifteen (15) minutes in duration.

-ALL WAVE POOL DECKS should be fenced off along the sides to prevent guests from entering the pool by jumping and/or diving. The fence should be installed so as to permit lifeguard access along the side walls. It is recommended that all fences be installed a MINIMUM of eighteen inches (18") back from the deck and side wall edge. IT SHOULD BE THE RESPONSIBILITY OF THE POOL OPERATOR to take ALL reasonable action to prevent jumping or diving into the wave pool from the decks.

-Guests should be permitted entry to the wave pool via the beach. Pool ladders should be used for EXITING PURPOSES ONLY.

-Exit ladders SHOULD BE KEPT CLEAR in order to afford immediate access for those needing to exit the pool during wave production.

-ONLY WATERPARK-APPROVED FLOTATION DEVICES should be permitted in the wave pool.

-Running into the wave pool from the beach SHOULD BE DISCOURAGED. LIFEGUARDS SHOULD PAY SPECIAL ATTENTION AND TAKE ALL APPROPRIATE ACTION TO PREVENT GUESTS FROM RUNNING INTO THE WATER.

-U.S. COAST GUARD APPROVED personal flotation devices (PFD'S) should be available for use by non-swimmers and/or novices.

-Children under forty-eight inches (48") SHOULD BE ACCOMPANIED BY AN ADULT while in the wave pool.

-Lifeguard chairs SHOULD MEET NPWLTP SAFETY STANDARDS. The standing board SHOULD NOT EXCEED five feet (5') of height above the static water line in the pool. Portable lifeguard chairs are recommended and SHOULD BE WIDE ENOUGH TO SAFELY PERMIT two (2) individuals to comfortably stand and exchange places without becoming entrapped or falling from the chair platform.

-Lifeguards SHOULD USE ONLY NPWLTP APPROVED rescue tubes available from various pool supply companies. Rescue tubes that do not meet NPWLTP specifications were designed for conventional lifesaving techniques - THESE HAVE PROVEN DANGEROUS IN WAVE POOLS.

-AT NO TIME should any lifeguard attempt to execute a body-contact-type rescue of a distressed swimmer in a wave pool. SUCH PRACTICES ARE EXTREMELY DANGEROUS AND SHOULD BE STRICTLY PROHIBITED.

-EMERGENCY CUT-OFF SWITCHES SHOULD BE MOUNTED so as to provide easy access by lifeguards WITHOUT REQUIRING THEM TO TAKE THEIR EYES OFF THE DISTRESSED SWIMMER. It is STRONGLY RECOMMENDED that cut-off switches be installed at foot level on the lifeguard chair so that the guard can step on the button to turn off the waves as he enters the wave pool. CAUTION SHOULD BE TAKEN TO PREVENT such buttons from entrapping a guard while wearing the rescue tube and jumping into the water. The strap on the rescue tube could become entangled around the button if not located properly.

CHECKLIST PRIOR TO START UP

BY _____

INITIAL TURN ON DATE _____

NOTE: Wear earplugs or muffs at all times while you are in the equipment room.

IMPORTANT

FOR INITIAL START UP, WAIT FOR AN AQUAWAVE/WAVETEK FIELD REPRESENTATIVE TO ARRIVE. HE WILL CHECK ALL THE ITEMS BELOW BEFORE INITIAL START UP.

****

I. COMPRESSOR

CHECKED	BY		
-------	----	1.	Pneumatic filter/regulator assembly installed in proper direction.
-------	----	2.	Air line to each cylinder and solenoid properly installed.
-------	----	3.	Drain valves on each end of the airline.
-------	----	4.	Airline pitched to provide drain at each end.
-------	----	5.	Shut off valve at air tank of receiver in line before filters.
-------	----	6.	Pressure switch in line, wired to fail safe in control panel.
-------	----	7.	Oil in compressor.
-------	----	8.	Oil in atomizer.
-------	----	9.	Air filter and oil filter cap in place. (On compressor)
-------	----	10.	Compressor properly bolted to concrete floor.

II. FANS & MOTORS

-------	----	1.	Check valves in proper location and sealing (if applicable).
-------	----	2.	Fans leveled, each leg of motor stand properly anchored.
-------	----	3.	Disconnect switch wired at each motor.

-------	----	4.	Stand-still heating wired to each motor from control panel. (if applicable)
-------	----	5.	Control panel wired to each motor. (Be sure connections are tight)
-------	----	6.	All bolts in place on fan.

III. PLENUM

-------	----	1.	Air duct adapters from plenum to valves securely bolted. (if applicable)
-------	----	2.	Vacuum and water flush out plenum of <u>all</u> dust and debris.
-------	----	3.	Valve on plenum drain line. (if applicable)
-------	----	4.	Plenum access covers bolted in place. (if applicable)

IV. AIR DIRECTIONAL VALVES

-------	----	1.	All solenoids individually wired via flex connection to junction box and conduit to control panel.
-------	----	2.	Each solenoid valve has an air inlet connection from air manifold line to intake manifold.
-------	----	3.	Cylinders turned to provide access to buffers and air connections. (if applicable)
-------	----	4.	Air line connections from solenoid to cylinder air connection.
-------	----	5.	All valves gasketed and bolted to stainless steel insert.
-------	----	6.	Splash guards in caissons anchored in place and sealed.
-------	----	7.	Air lines in place and secured from plenum to valve intake port.

V. ELECTRICAL (NO POWER - MAIN DISCONNECT "OFF")

-------	----	1.	Check for any visual damage (MCC).
-------	----	2.	Check electrical connetions to:
-------	----	a.	Incoming line, the main circuit breaker, compressor circuit breaker.
-------	----	b.	the overload relays.

-------	----	c. The disconnect at the fan motors.
-------	----	d. The disconnect at the compresor motor.
-------	----	e. The lifeguard stations.
-------	----	f. The bell.
-------	----	g. The solenoid valves.
-------	----	h. The temperature switches.
-------	----	i. Has control wiring been distrubed.
-------	----	3. Ready for Power to MCC - Make sure only the Electrical Contractors turn on the power to our MCC. Check voltage.
		4. After power is turned on to the MCC, check:
-------	----	a. Control Functions
-------	----	b. Phase sequence to solid state starter.
-------	----	c. Compressor motor rotation.
-------	----	d. Fan Motor Rotation.
-------	----	e. With compressor running and air directional valves operating (fan disconnects in off position) check 'dead heading' of valves during emergency stop condition.
		5. System ready for turn-on.
-------	----	a. Turn on C/B's and disconnects.
-------	----	b. All indicating lights are lit.
-------	----	c. Check fault indicating lights.
		6. During start-up.
-------	----	a. Adjust current limit and voltage ramp functions (if applicable)

CONTINUE NEXT PAGE

7. After the system is running:

------- ---- a. Check current levels and record the amperage after balancing the loads:

-During start-up--Fan 1____
Fan 2____
Fan 3____
Fan 4____

		A	B	C
-Running--	Fan 1	____	____	____
	Fan 2	____	____	____
	Fan 3	____	____	____
	Fan 4	____	____	____

-Dead Head--
(if applicable)
Fan 1____
Fan 2____
Fan 3____
Fan 4____

------- ---- b. Check stop-start stations.

BEARING 1				BEARING 2				
DATE	VERTICAL	HORIZONTAL	AXIAL	DATE	VERTICAL	HORIZONTAL	AXIAL	FAN
								1
								2
								3
								4
								5
								6
								7
								8

MACHINE IDENT. _____

BEARING IDENT. _____

RUNNING SPEED _____

START-UP DATE _____

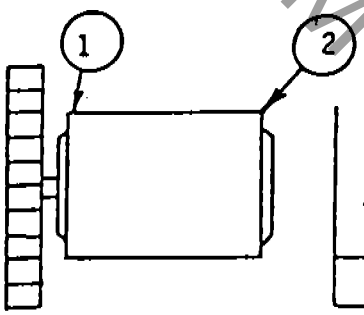

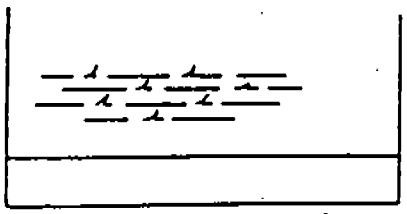

FAN SEQUENCE

8					DESCRIPTION: VIBRATION HISTORY CHART		BY	DATE
7						DR.	KP	
6						CH.		
5					PROJECT:	SCALE:		
4								
3					WaveTek	TOL.	DEC. ±	
2							FRACT. ±	
1								

OPERATING INSTRUCTIONS

FOR SINGLE VALVE SINGLE FAN VARAWAVE SYSTEM

These operating instructions are for the sole purpose of operating the system and are not intended nor do they explain any maintenance procedures.

Prior to any action regarding the starting of this equipment it is essential that the red button on the outside of the control panel must be pushed in to prevent any accidental starting of equipment and to prevent any injuries which may result from such accidental starting.

I. TO START UP SYSTEM

NOTE: THIS EQUIPMENT HAS A MANUAL DIAMOND CIRCUIT BUILT IN TO THE CONTROL SYSTEM. IT IS OPERATED BY THE MANUAL DIAMOND KEY SWITCH INSIDE THE CONTROL PANEL. BEWARE THAT WHEN THE MANUAL DIAMOND KEY SWITCH IS ON AND THE SYSTEM STOP SWITCH IS PULLED OUT (control circuit is energized) THE FAN MOTOR STARTER WILL BE ENERGIZED.

A. GENERAL

1. Visually inspect all equipment to be sure there are no obvious problems or personnel working on the equipment.
2. Perform daily maintenance procedure guidelines in maintenance section or manual.

B. AIR COMPRESSOR

1. Check crank case oil for proper level and refill as

required.

2. Open the drain valve on the bottom of the air receiver (air tank) as well as the drain valves at each end of the air header line to the air directional valves.

3. Start the air compressor by depressing the start button on the compressor starter. Note some systems do not have start stop buttons on the starter these systems are started by the disconnect switch.

   Note: Make sure the safety switch is in the on position (if applicable).

4. With the compressor running, close the drain valve at the bottom of the receiver tank as well as the drain valves on all of the air header lines, when moisture is not evident.

5. Allow compressor to operate until the proper pressure is reached.

C. **WAVE GENERATION FAN**

1. Place the safety switches to the on position.(if applicable)

   NOTE:THE FAN MOTORS ARE STARTED AND STOPPED BY THE COMPUTER. THE ABOVE STEP ONLY ENABLE THE FAN MOTORS TO RUN. (BEWARE) IF COMPUTER IS ALREADY TRIGGERED TO START SYSTEM, THE MOTOR WILL START UP.

D. **CONTROL PANEL**

1. At the motor control center set the motor circuit breaker to the "ON" position. (6" handle on panel door)

2. At the electronic control panel door of the motor control

center do as follows:

a. Pull red stop button on the front of the panel to the "ON" position.(this action energizes the control circuits)

b. Observe that the 'CONTROL POWER' indicator is lit.

c. Observe that the 'OK LIFEGUARD' indicators are lit. If not lit, check to ensure that all the lifeguard stop buttons and the PANEL 'WAVE STOP' SWITCHES are in their 'ON' positions. This light will remain lit until a lifeguard stop button is depressed.

d. If the lifeguards are ready for the waves to commence and at least 20 minutes have elapsed since last system start then turn the 'START' push button clockwise with a key and depress momentarily. (A bell will sound {if applicable} after the wave generators will commence making waves.)

The wave generating equipment is now in full automatic operation. The waves will be generated for the length of time set for 'RUN Time'. When 'RUN TIME' is reached, the system will REST and the 'REST PERIOD' will begin.

3. At automatic shutdown, observe that 'CONTROL POWER', 'OK LIFEGUARD', and 'REST PERIOD' indicators are lit. (The run light goes out and the 'REST TIME' timer (internal to computer) begins. When this period has elapsed, the wave generation automatically starts up again.) (The bell rings, and the indicator lights change back to previous condition.)

4. At pool side, the system may be started by turning the "start" push button at the lifeguard chair clockwise with a key and depressing momentarily.

NOTE: TIMERS CONTINUE TO RUN DURING A STOP CONDITION.

SYSTEM WILL RESTART AT LOCATION, WHERE TIMERS HAVE COUNTED OUT TO, WHETHER ITS A 'RUN' OR 'REST' PERIOD.

MANUAL DIAMOND:

TO OPERATE THE EQUIPMENT IN MANUAL DIAMOND

1. Make sure that the "SYSTEM STOP" button has been push in to shut entire system off.
2. Open the enclosure door and turn the manual diamond switch (key switch) clock wise to the on position.
3. Close the enclosure door.
4. Turn on main breaker (6" handle on panel door).
5. Pull on the system stop button (NOTE: THE FAN MOTOR WILL START) to energize the system.
6. To make waves activate the start key switch. Waves will begin to commence, no bell will sound.
7. To stop waves depress any life guard stop button or the wave stop switch on the control panel. To start wave again repeat step 6.

II. <u>TO STOP SYSTEM</u>

A. At Pool Side (Stops waves only)(Emergency Stop)- depress any of the red "stop" buttons located at the lifeguard chairs. Pull to reset. (System must be key started to begin waves)

B. At the Electronic Control Panel (Stops waves and fan motors) depress the 'SYSTEM STOP' button. Pull to re-energize circuit.

NOTE: After this stop situation, the Wave Generating system must be restarted. The system restarts from the beginning, not from the time when the system was stopped. Wait at least 20 minutes since last start of the system before doing this.

C. At the end of the day - Depress System Stop on the control panel, set the main circuit breaker switch to 'OFF',

remove the key (optional)

D. Depressing 'WAVE STOP' button in control panel will disenable A.D.V. from operating in its corresponding pool. However, Wave fan will continue to operate.

III. THUMBWHEEL TIMER

A. Select wave time operation and rest time operation on thumb wheel at right side of programmer.

B. The timers are seconds to the tenth, i.e., they are capable of timing up to 999.9 seconds.

C. Wave operating time is suggested to be not in excess of 12 minutes (720 seconds) and rest time of no less than 10 minutes (600 seconds). Note: Reasons for the suggested times are multiple:

A) It gives the lifeguards the necessary rest period; B) It provides for loading and unloading of the pool.

D. If continuous run of equipment is desired set the 'REST TIME' to 000.0 seconds.

E. The third from the top thumbwheel timer (not labeled) is used to set bell ring duration. It is adjusted in the same manner as the run and rest timers are.

F. The bottom thumbwheel timer (not labeled) is used to set the delay time that exist after the bell is done ringing and before the waves commence. It's adjusted in the same manner as the above mentioned thumbwheel.

IV. WAVE SELECTION

NOTE: No wave should be selected or changed while equipment is operating. You may either select your wave pattern before starting the system or invoke either wave stop or life guard stop to stop the wave generation, so that wave selection may be chosen.

TO SELECT WAVE PATTERN THE SELECT SWITCH WILL BE USED.

SELECT SWITCH; The selection switch is a rotary switch that is used to select witch wave pattern that will entered.

TO SELECT A WAVE or SEQUENCE OF WAVES DO THE FOLLOWING

A) Make sure that wave stop has been invoked.
B) Rotate the select knob to the pattern you would like to choose (Note: 1 BOTH 2).
C) Restart the wave equipment with the key switch (the system start switch).

V. WAVE TYPE

Indicates wave pattern corresponding to label on selector switch.

1. DIAMOND
BOTH (alternates between wave types 1 and 2)
2. ROLLER

VI. PANEL INDICATORS AND CONTROLS.

HIGH TEMP. LIGHT:	Indicates when equipment room temp. is too high.
LOW PRESSURE LIGHT:	Indicates when compressor air pressure is too low.
MODE SWITCH:	Switches operation between fan motor continuous run or motor stop on rest period.
CONTROL POWER LIGHT:	Indicates that control power is present.

SELECT SWITCH:	3 position rotary select switch for selecting wave patterns.
WAVE STOP SWITCH:	Panel mounted switch that stop waves the same as life guard stop switch.
OK LIFE GUARD LIGHT:	Indicator light that tells operator all life guard stop station and the wave stop switch are set for start of waves.
RUN LIGHT	Indicates that equipment is in wave run period.
REST LIGHT	Indicates that equipment is in wave rest period.
SYSTEM START	Key operated momentary contact switch used for starting the system and restarting after wave stop or life guard stop.
SYSTEM STOP	Mushroom style push/pull switch used to stop entire system. Note; turns control power on and off. Must be in pulled out position to start system.
KEY PAD	Computer key pad, used to input and retrieve information to and from the computer.
THUMB WHEEL INPUT UNIT:	1. Run time set. Run period duration. 2. Rest time set. Rest period duration. 3. Bell time set. Bell ring duration time. 4. Delay time set. Time after bell ring and before wave start.
MAIN DISCONNECT:	Switch gear operator to turn on/off high voltage power. Note: 120 volt control power may still be energized.
TRIP:	Indicates a fan motor has a thermal overload trip condition.

VII. PANEL INTERNAL COMPONENTS

COMPUTER	Power supply for computer CPU, Output signals and Input signals.
RELAY BANK	Bank of control relays.
CR	Control relay: Controls system operation, must be energized by key switch to generate waves.
PR	Pressure relay: Energizes on low air pressure condition. Interrupts system (causes a system stop to take place) and lights low pressure light.
TR	Temperature relay: Energizes on high temperature condition. Interrupts system (causes a system stop to take place) and lights high temp light.
CRM1 CRM2	Manual diamond transition relays used to transfer control from the computer to the manual diamond circuit.
FF	Precision timer used to generate the manual diamond wave.

MAINTENANCE INSTRUCTIONS

D= DAILY W= WEEKLY M= MONTHLY Y= YEARLY

A. GENERAL

To insure maximum life of the wave-making machine, the following points must be observed:

a. Maintenance should be carried out by a mechanically qualified person.

b. A complete inspection should be carried out once a year by a maintenance service representative appointed by AQUATIC AMUSEMENT ASSOCIATES, LTD.

c. Immediately inform AQUATIC AMUSEMENT ASSOCIATES, LTD. on occurence of any malfunction; and, if possible, give a clear description of the cause and the component causing the malfunction.

d. Have each malfunction repaired immediately to prevent greater damage.

B. MOTOR CONTROL CENTER

CAUTION: REMOVE ALL POWER FROM THE MOTOR CONTROL CENTER BEFORE PERFORMING ANY MAINTENANCE.

The control panel should be inspected regularly for brown deposits caused by sparks on the switches and near the main cables.

It is essential that the control panel always be clean and dry.

The control panel is supplied with a heating element to prevent condensation in the panel as well as standstill heating for the fan motor. It is, therefore, advisable never to switch off the 110V supply current to the MCC.

Control panels which are fitted with a fan, need regular cleaning of the filter.

Regularly check to verify if the heating of the control panel works.

ALWAYS WORK ON THE CONTROL PANEL WITH THE CURRENT SWITCHED OFF AND NEVER WORK ALONE

_M_ 1. Check the filters on the ventilation openings and clean if necessary.

_Y_ 2. Check incoming line lugs and tighten if required.

_D_ 3. Check for signs of corrosion.

_Y_ 4. Check all power lugs and tighten if required.

_Y_ 5. Vacuum out dust and dirt.

C. WAVE GENERATORS (TURN OFF DISCONNECT SWITCH AT MOTOR)

_M_ 1. Check to insure that the fan impellar has not moved on the motor shaft. Return it to its initial position and tighten the hub screws if the impellar has moved.

_M_ 2. Check and tighten foundation bolts and motor mounting bolts.

_M_ 3. Check wheel impellar, examining all surfaces for erosion or excessive wear. Keep fan inlet screen clean.

_M_ 4. Tighten all set screws in the fan wheel hub. Repeat after the first day's operation and check to see that the fan wheel has not moved.

D. WAVE GENERATOR MOTOR

_M_ 1. Inspect the motors for excessive dirt, friction or vibration. Keep the ventilation openings clear to allow free passage of air. Be sure the drain holes in the motors are kept open.

E. _AIR DIRECTIONAL VALVES

The wave-making valves require very little maintenance. However, it is advisable to regularly (approximately once a month) inspect the valves for proper operation. Worn parts should be promptly replaced.

Special attention should be given to the complete opening and closing of the valves as well as the speed with which this takes place. The speed of this movement is to be compared with the other valves. Valves should move briskly to nearly the end of their movement and then close gently.

The wave-making valves should be cleaned regularly; dirt and deposits caused by the corrosive atmosphere are to be removed.

_D_ 1. With compressor running and all fan disconnect switches open, key start system to observe operation of each ADV before starting wave generators.

_D_ 2. Observe actual operation of ADV's during the initial wave cycle for that day. Use ear protection and employ caution when working around the operating equipment. Observe the sequencing of the ADV's "under load", which may be different from the "unloaded" conditions observed in "Start-up" preparation activities. Adjust the ADV's if necessary. (if applicable)

_W_ 3. Lubricate the spherical bearing at the cylinder clevis and oil the rear clevis of the cylinder. (WaveTek and Varawave valves only)

_W_ 4. Check and tighten foundation bolts, adapter bolts.

_M_ 5. Rod, seal and wiper. Once a year replacement of these seals will provide maximum cylinder performance.

F. SOLENOIDS

_Y_ 1. Service valve body per manufacturers recommendations in the component section of this manual.

_Y_ 2. Service solenoid section per manufacturers recommendations in the component section of this manual.

_Y_ 3. Service pilot body per recommendations in the component section of this manual.

G. PNEUMATIC FILTER, REGULATOR AND LUBRICATOR

_D_ 1. Regulator: The regulator sets the pressure for operating the ADV's. Check to make sure the pressure setting has not changed. To increase the pressure setting, turn the adjusting handle clockwise; to reduce the setting, turn counter clockwise. When reducing the pressure, a small hissing will occur. This is normal. Operating pressure should be the minimum required to provide smooth operation of <u>all</u> ADV's (while the system is making waves), pressure regulator setting is 110 psi maximum.

_D_ 2. Purge lines: To remove condensate that accumulates in the system, purge at each of the following locations: all

bleed valves, condensate drain under compressor tank, and drip legs.

_D_ 3. Lubricator: The lubricators provide lubricant to the cylinder and solenoid valve to minimize wear on these moving parts. Inspect the oil level; fill if required. To add oil follow this procedure:

CAUTION: Shut off the air supply and make sure the line pressure is zero.

a. Remove the fill plug.
b. Fill to visible fill line only, approx 2/3 full - do not over fill.
c. Use SAE 10 non-detergent oil.
d. Replace the fill plug and seat firmly, DO NOT OVER TORQUE.

CAUTION: Shut off the air supply and make sure the line pressure is zero.

_D_ 4. Check to see that oil is dripping at the sight gage when the cylinder is operating.

To adjust the drip rate, use a slotted screwdriver to turn the adjusting screw in the top of the lubricator. Drip rate setting is four drops per minute for lubricators servicing two Air Directional Valves and two drops per minute for lubricators servicing one Air Directional Valve.

_Y_ 5. Remove and replace filters. Reassemble, making sure to replace all gaskets in their proper place.

H. COMPRESSOR

The manufacturers recommended service and maintenance instructions are included in the component section of this manual. Since air compressor models and configurations vary from job to job it is necessary for the service personnel to read and become familiar with these specific instructions. The instructions presented below are in addition to any recommended proceedures by the manufacturer.

_D_ 1. Turn power off and drain moisture from tank by opening drain cock at bottom of tank at end of operating day.

_D_ 2. Check oil level in the crankcase.

_W_ 3. Test all safety devices, especially high pressure safety valve, by pulling ring.

_W_ 4. Check V-belts for tightness. Belt tension should be adjusted to allow approximately 3/8" - 1/2" deflection in center of longest span, with normal thumb pressure.(if applicable to compressor type)

_W_ 5. Turn power off and clean dust and foreign material from cylinder head, motor, fan blade, air lines, intercooler and tank.

_W_ 6. Remove and clean intake air filters. Do not wash element. Do not oil. Blow dirt from element from inside with light air pressure.

_W_ 7. Check all screws and nuts for tightness. Tighten to torque values in the compressor maintenance manuals.

SHUTDOWN PROCEDURE FOR EXTENDED TIME PERIOD

During extended shutdown period the following preparations must be made:

Clean all equipment from dirt and dust.

Provide the pneumatic compressor unit, the fans and their motors and the air directional valves with dust covers.

Cover all bare metal surfaces with a good grade of grease to prevent corrosion -- particularly the pneumatic cylinder piston rods of the air directional valves.

If the air cylinder piston rod is extended, it should be manually pushed back into its cylinder bore; (it may be necessary to open air lines from solenoid valve to the air cylinder to release pressure in cylinder.)

IF YOUR SYSTEM IS EQUIPPED WITH A ROTARY SCREW TYPE COMPRESSOR DO NOT PERFORM THE FOLLOWING PROCEDURE:

If your system is equipped with a reciprocating style air compressor coat all interior surfaces of the compressor to protect it against rust by draining the frame and refilling it with a rust inhibiting oil. The unit should now be operated for fifteen minutes and the oil should be fogged into the compressor intake, thus coating all internal surfaces. Leave the rust inhibiting oil in the frame. Note: When putting the unit back into service, replace the rust inhibiting oil with compressor lubricating oil. Drain the air receiver of all moisture.

Turn off all circuit breakers and the main disconnect switch to the motor control center. DO NOT SHUT OFF THE 110V SUPPLY TO THE MCC.

START UP PROCEDURE FOR THE NEW SEASON

NOTE: Before filling the pool, check the screens at the caisson opening for any deterioration and make adjustments as required.

Fill the pool with water. Never run the wave-making machinery without water in the pool reaching the overflow trench level. Permanent damage to the machinery may result.

Remove protective covers.

Clean equipment from dust.

Clean pneumatic cylinder piston rods with benzine to remove all grease CAUTION: Do not use petroleum cleaner.

Lubricate ALL cylinder pivot pins on the air directional valves. (if applicable)

Lubricate the air directional valve bearings.

Drain the rust inhibiting oil from the compressor and replace with SAE 10W non-detergent oil. Be sure all taped openings are open before starting the compressor. (If applicable - See Shutdown)

Replace the compressor inlet filter.

Never disturb the adjustment of the system.

Check for loose screws on any component of the machinery and tighten.

Perform the maintenance listed under the maintenance section of this manual.

Check the pneumatic lines for any leaks and repair as necessary.

Check all power lugs in the fan motor starter for corrosion and looseness. Clean and tighten as necessary.

CONTROL PANEL

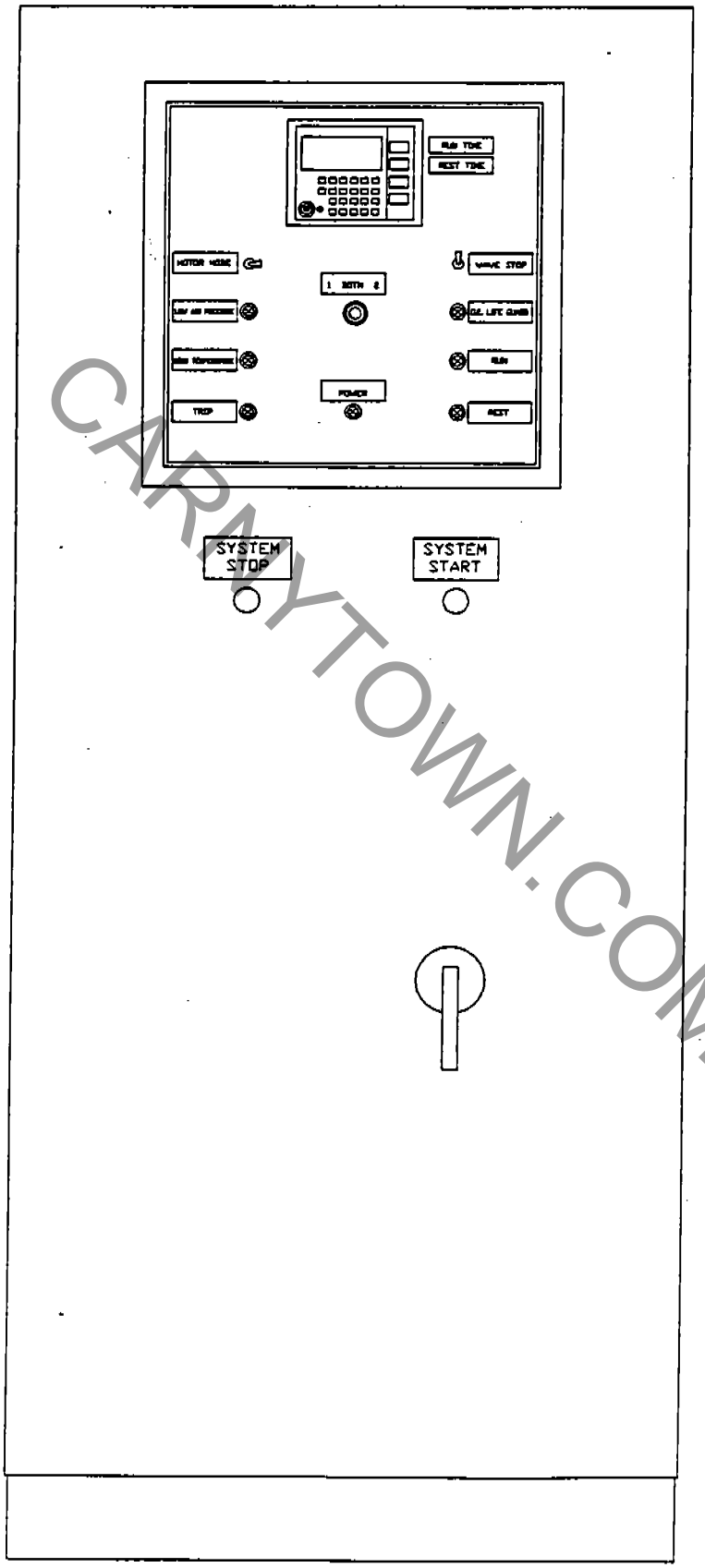

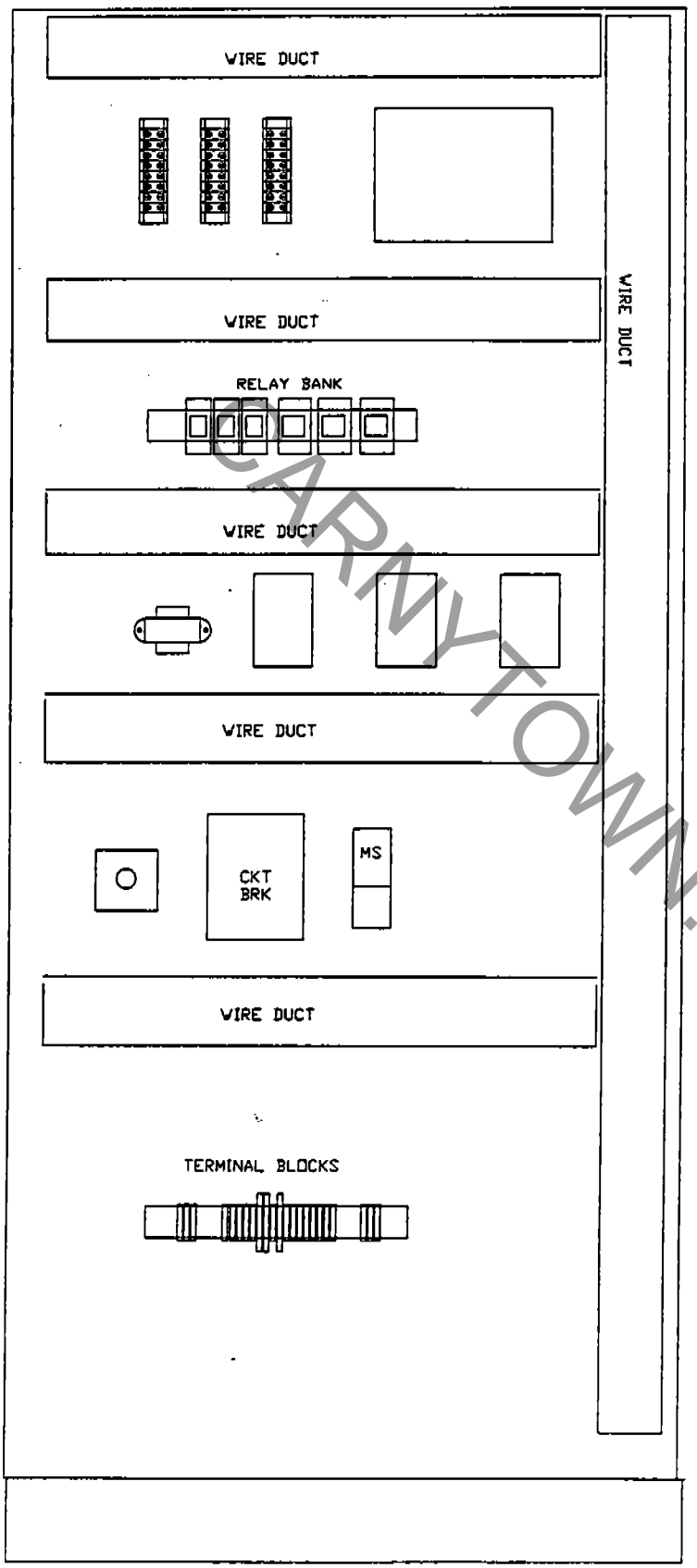

RAPIDS

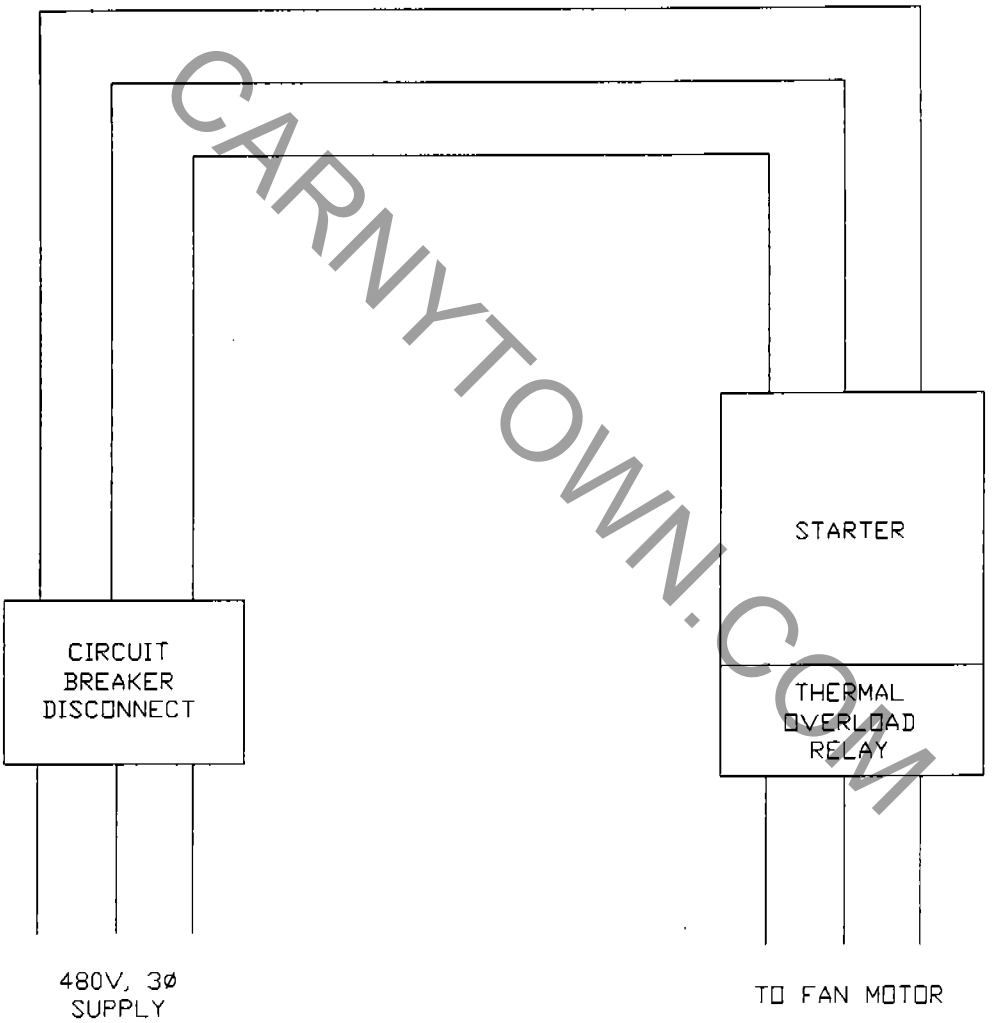

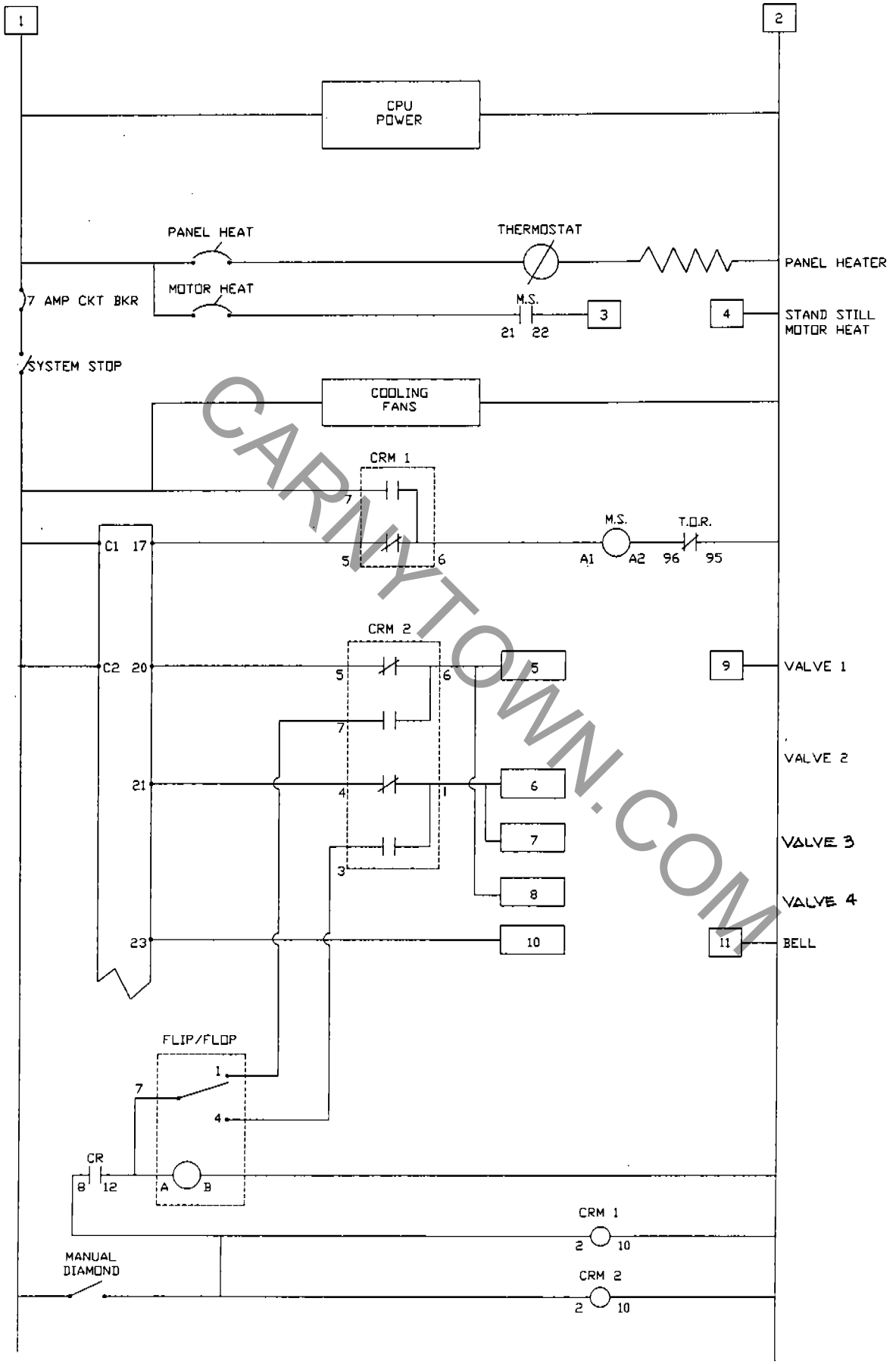

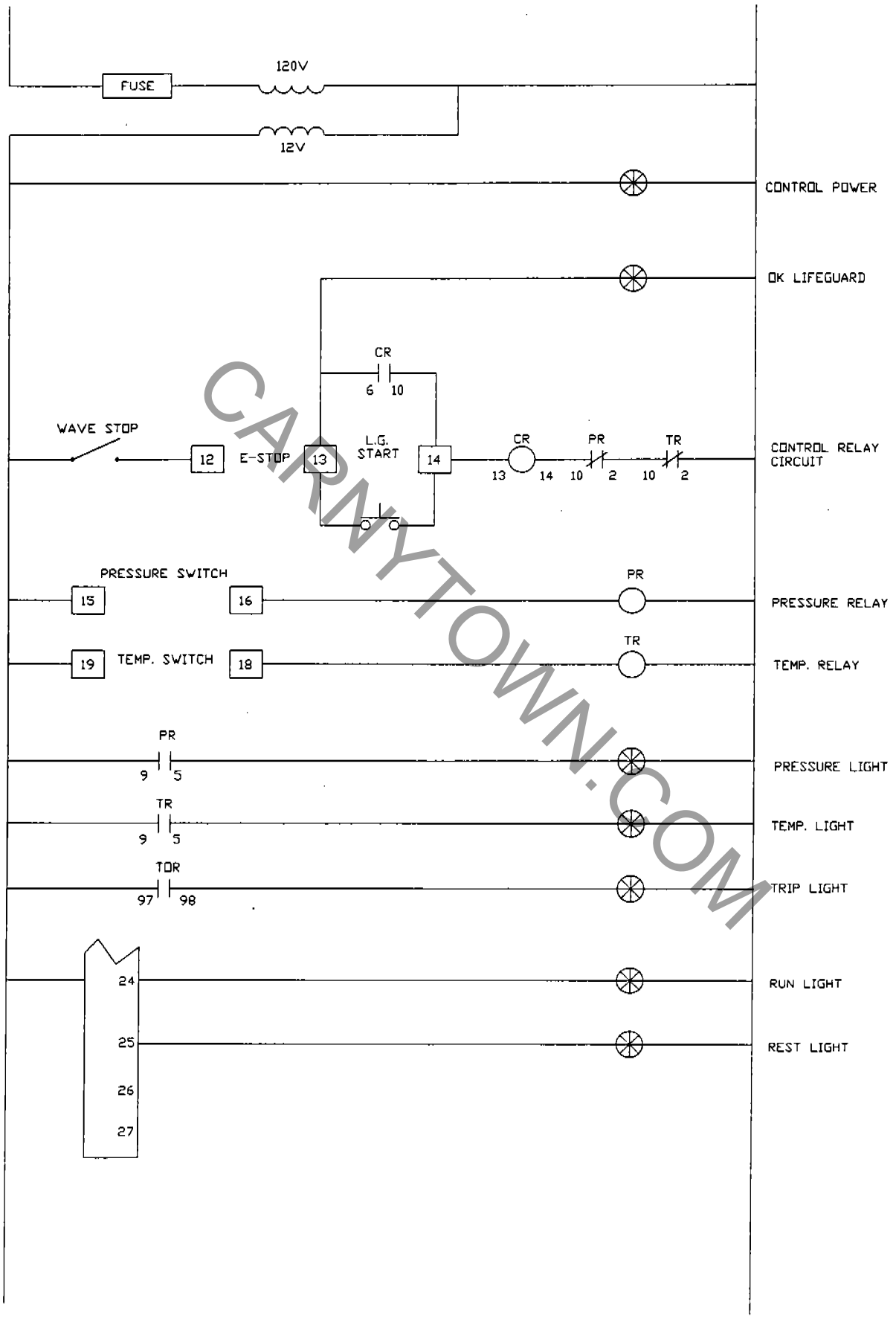

INPUT SIGNALS

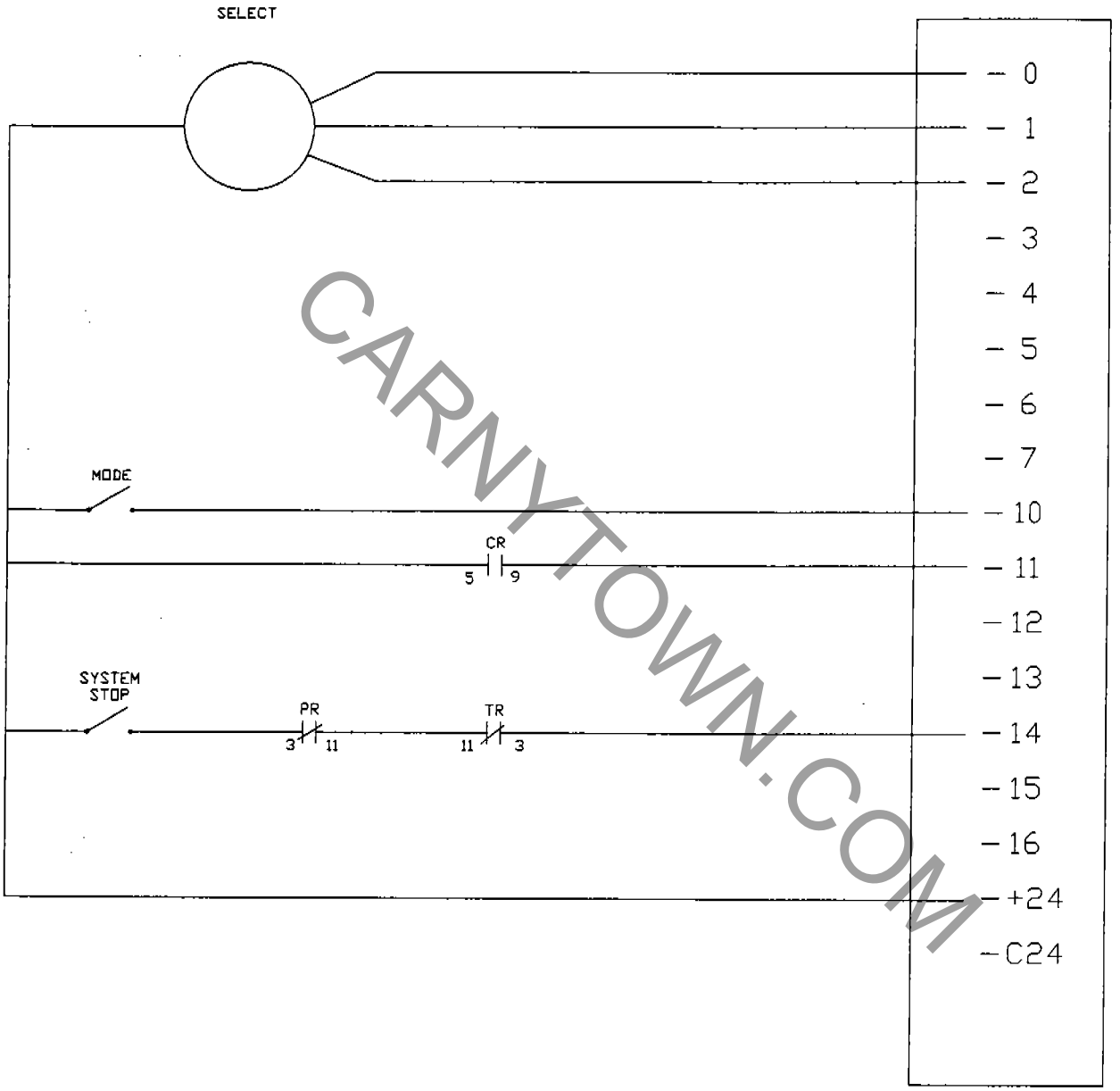

WAVE FAN

WAVE GENERATING FANS

STORAGE:

If the fan is not to be installed promptly, store it in a dry place with the motor and wheel protected against moisture, dust, corrosion and physical damage. If the unit must be exposed to weather, contact the Motor manufacturer for special instructions.

SAFETY PRECAUTIONS:

The fan which you have purchased is a rotating piece of equipment and can become a source of danger to life or cause injury if not properly applied.

Personnel who will operate this fan, or those who will perform maintenance thereon, must be given this bulletin to read and warned of the potential hazards of this equipment.

This pamphlet contains general recommendations, but specific requirements may apply to the individual installation. Such requirements are outlined in federal, state and local safety codes. Strict compliance with these codes, and strict adherence to these installation instructions are the responsibility of the user. Inlet and discharge screens are accessories.

INSTALLATION

1. Good results require foundation. Foundations should be level, rigid, and of sufficient mass for the equipment. Concrete is preferable. Its mass should equal four times the fan weight. Adequately brace steel platforms in all direction. The minimum natural frequency of any part must be at least 50% higher than the fan running speed.

2. Shim the fan support points before tightening foundation bolts. Do not distort or twist the equipment. Make sure that the fan is set level.

3. Check wheel-to-inlet cone clearance to make sure it has not shifted during shipment or handling. There should be approximately equal axial clearance all around. Rotate wheel by hand to check that it runs free.

4. If the fan wheel is fastened with a taper-lock bushing and the wheel must be shifted, follow this procedure:

limit the horsepower drawn during a test run with limited ductwork.

4. After the trial run lock the power "OFF".

5. Recheck for tightness of hold-down bolts, all set screws and keys, and retighten if necessary. Recheck again after 8 and 24 hours of actual operation.

6. The run-in period should be at least 8 hours. Check the motor bearings and motor heating a minimum of once each hour. Do not overgrease motor bearings. Relubricate per motor manufacturer's instructions.

MAINTENANCE:

Should excessive vibration or motor temperature later develop, check the following possibilities: (1) Buildup of dirt or foreign material on wheel; (2) Bolts on motor or fan housing foundation loose; (3) The wheel eroding or corroding; (4) Wheel set screws loose; (5) Vibration coming from source other than fan; (6) Foundation settled; (7) Clearance between wheel and inlet has changed and wheel is hitting.

If the fan is to remain idle for an extended period, protect motor and exposed surfaces. Follow the motor manufacturer's recommendations for storage and rotate the shaft by hand several revolutions each month.

WARNING: Have qualified personnel perform troubleshooting and maintenance work. Read and follow the instructions below under Safety Precautions.

The purpose of this bulletin is to help you recognize problems, make the corrections and avoid motor failures. Consequently, the bulletin defines various "Symptoms", lists "Possible Causes" and recommends specific "Corrections".

It is absolutely necessary to get and deal with the actual facts and not prejudiced opinions. When dealing with specifics, the information must be correct and complete; i.e. volts and amps must be read with accurate meters in all three phases. Speed and time readings must be taken accurately. All information should be firsthand and not hearsay.

With the proper understanding of this Troubleshooting Guide by Lincoln Sales and/or FSS personnel and the full cooperation of the OEM or user/customer, many of these troubles can be resolved and answered over the telephone. This can save time, expense and further trouble for everybody involved.

⚠ WARNING

HIGH VOLTAGE can kill.

- Do not operate with covers removed.
- Disconnect input power before servicing.
- Do not touch electrically live parts.

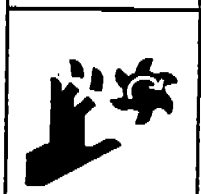

MOVING PARTS can injure.

- Keep away from moving parts.
- Be sure shaft key is captive BEFORE starting.
- Consider application and provide guarding to protect personnel.

FALLING EQUIPMENT can injure.

- Use motor lift ring to lift ONLY motor.
- Lift only with equipment of adequate lifting capacity.

SAFETY INSTRUCTIONS:

- Install and ground equipment per the National Electrical Code.
- Only qualified personnel should install, use or service this equipment.
- Be sure all nameplates and decals are readable.
- See NEMA MG2, "Safety for Construction and Guide for Selection, Installation and Use of Electric Motors and Generators."

WARNING: When Using Lift Bail

Do not use the lift bail on the motor to lift the motor along with additional equipment, such as pumps, compressors or other driven machinery. In the case of assemblies on a common base, do not lift with the motor lift bail, but rather use a sling around the base or the lifting means provided on the base. In all cases, take care to assure lifting only in the direction intended in the design of the lifting means. Also, be careful to avoid hazardous overloads due to deceleration, acceleration or shock forces.

MOTOR TROUBLESHOOTING GUIDE

SYMPTOM	POSSIBLE CAUSES	CORRECTION
High Input Current (all three phases)	Accuracy of ammeter readings.	First check accuracy of ammeter readings on all three phases.
Running Idle (Disconnected from load)	High Line Voltage 5 to 10% over nameplate.	Consult power company — possibly decrease by using lower transformer tap.
Running Loaded	Motor Overloaded.	Reduce load or use larger motor.
	Motor voltage rating does not match power system voltage.	Replace motor with one of correct voltage rating.
		Consult power company — possibly correct by using a different transformer tap.

Reference: Bulletin B2T
Table III

MOTOR TROUBLESHOOTING GUIDE

SYMPTOM	POSSIBLE CAUSES	CORRECTION
Unbalanced Input Current (5% or more deviation from the average input current)	**Unbalanced Line Voltage due to:** a. Power Supply. b. Unbalanced System Loading. c. High Resistance Connection. d. Undersized Supply Lines.	Carefully check voltage across each phase *at the motor terminals* with a properly calibrated voltmeter.
NOTE: A small voltage unbalance will produce a large current unbalance. Depending on the magnitude of unbalance and the size of the load, the input current in one or more of the motor input lines may greatly exceed the current rating of the motor.	Defective Motor.	If there is doubt as to whether the trouble lies with the power supply or the motor, check per the following: Rotate *all three input power lines* to the motor by one position — i.e., move line #1 to #2 motor lead, line #2 to #3 motor lead and line #3 to #1 motor lead. a. If the unbalanced current pattern follows the *input power lines,* the problem is in the power supply. b. If the unbalanced current pattern follows the *motor leads,* the problem is in the motor. Correct the voltage balance of the power supply or replace the motor, depending on the answer to a. & b. above.

Reference: Bulletin D3T
Pages 1 & 2

MOTOR TROUBLESHOOTING GUIDE

SYMPTOM	POSSIBLE CAUSES	CORRECTION
Excessive Voltage Drop (more than 2 or 3% of nominal supply voltage)	Excessive Starting or Running Load.	Reduce load.
	Inadequate Power Supply.	Consult power company.
	Undersized Supply Lines.	Increase line sizes.
	High Resistance Connections.	Check motor leads and eliminate poor connections.
	Each phase lead run in separate conduits.	All 3 phase leads shall be in a single conduit, per National Electrical Code. (This applies only to metal conduit with magnetic properties.)
Overload Relays Tripping Upon Starting (Also see "Slow Starting" — page 6)	Slow Starting (10 – 15 seconds or more) due to High Inertia Load.	Reduce starting load. Increase motor size if necessary.
	Low voltage at motor terminals.	Improve power supply and/or increase line size.
Running Loaded	Overload.	Reduce load or increase motor size.
	Unbalanced Input Current.	Balance supply voltage (see page 3).
	Single Phasing.	Eliminate.
	Excessive Voltage Drop.	Eliminate (see above).
	Too frequent starting or intermittent overloading.	Reduce frequency of starts and overloading or increase motor size.
	High Ambient Starter Temperatures.	Reduce ambient temperature or provide outside source of cooler air.
	Wrong Size Relays.	Correct size per nameplate current of motor. Relays have built in allowances for service factor current. Refer to National Electrical Code.

Reference: Bulletin D3T, Pages 1 & 2
Bulletin D6T

MOTOR TROUBLESHOOTING GUIDE

SYMPTOM	POSSIBLE CAUSES	CORRECTION
Motor Runs Excessively Hot	Overloaded.	Reduce load or load peaks and number of starts in cycle or increase motor size. (Also see page 2).
	Blocked Ventilation: a. TEFC's.	Clean External ventilation system — check fan.
	b. O.D.P.'s.	Blow out internal ventilation passages. Eliminate external interference to motor ventilation.
	High Ambient Temperature over 40°C (104°F).	Reduce ambient temperature or provide outside source of cooler air.
	Unbalanced Input Current.	Balance supply voltage. Check motor leads for tightness. (Also see page 3).
	Single Phased.	Eliminate single phase condition.
Won't Start (just hums and heats up)	Single Phased.	Shut power off. Eliminate single phasing. Check motor leads for tightness.
	Rotor or bearings locked.	Shut power off. Check shaft for freeness of rotation. Be sure proper sized overload relays are in *each of the 3 phases* of starter. Refer to National Electrical Code.
Runs Noisy Under Load (excessive electrical noise or chatter under load)	Single Phased.	Shut power off. If motor cannot be restarted, it is single phased. Eliminate single phasing. Be sure proper sized overload relays are in *each of the 3 phases* of the starter. Refer to National Electrical Code.

Reference: Bulletin D3T
Pages 1 & 2

MOTOR TROUBLESHOOTING GUIDE

SYMPTOM	POSSIBLE CAUSES	CORRECTION
Slow Starting (10 or more seconds on small motors – 15 or more seconds on large motors)		
Across the Line Start.	Excessive Voltage Drop (5 – 10% voltage drop causes 10 – 20% or more drop in starting torque).	Consult power company — Check system. Eliminate voltage drop. (See page 4.)
	High Inertia Load.	Reduce starting load or increase motor size.
Reduced Voltage Start.	Excessive Voltage Drop. Loss of Starting Torque.	Check and eliminate per page 4.
Y-Delta	Starting Torque Reduced to 33%.	Reduce starting load or increase motor size.
PWS	Starting Torque Reduced to 50%.	Choose type of starter with higher starting torque.
Auto. Transformer	Starting Torque Reduced — 25% to 64%.	Reduce time delay between 1st and 2nd step on starter — get motor across the line sooner.
Load Speed Appreciably Below Nameplate Speed	Overload.	Reduce load.
	Excessively Low Voltage.	**NOTE:** A reasonable overload or voltage drop of 10 – 15% will reduce speed only 1 – 2%. A report of any greater drop would be questionable.
	Inaccurate method of measuring RPM.	Check meter using another device or method.

Reference: Bulletin B2T, Tbl I
Bulletin D2T
Bulletin D6T

MOTOR TROUBLESHOOTING GUIDE

SYMPTOM	POSSIBLE CAUSES	CORRECTIONS
Excessive Vibration (mechanical)	Out of Balance: a. Motor Mounting.	Be sure motor mounting is tight and solid.
	b. Load.	Disconnect belt or coupling — restart motor — if vibration stops, the unbalance was in load.
	c. Sheaves or Coupling.	Remove sheave or coupling — securely tape ½ key in shaft keyway and restart motor — if vibration stops, the unbalance was in the sheave or coupling.
	d. Motor.	If the vibration does not stop after checking a, b and c above, the unbalance is in the motor — replace the motor.
	e. Misalignment on Close Coupled Application.	Check and realign motor to the driven machine.
Noisy Bearings (listen to bearings)		
Smooth Mid Range Hum	Normal Fit.	Bearing OK.
High Whine	Internal fit of bearing too tight.	Replace bearing — check fit.
Low Rumble	Internal fit of bearing too loose.	Replace bearing — check fit.
Rough Clatter	Bearing Destroyed.	Replace bearing — Avoid: a. Mechanical Damage. b. Excessive Greasing. c. Wrong Grease. d. Solid Contaminants. e. Water running into motor. f. Misalignment on close coupled application. g. Excessive belt tension.

MOTOR TROUBLESHOOTING GUIDE

SYMPTOM	POSSIBLE CAUSES	CORRECTIONS
Mechanical Noise	Driven Machine or Motor Noise?	Isolate motor from driven machine — check difference in noise level.
	Motor Noise Amplified by resonant mounting.	Cushion motor mounting or dampen source of resonance.
	Driven Machine Noise transmitted to motor through drive.	Reduce noise of driven machine or dampen transmission to motor.
	Misalignment on close coupled application.	Improve alignment.

LINCOLN ELECTRIC®

THE LINCOLN ELECTRIC COMPANY

World's Largest Manufacturer of Arc Welding Products • Manufacturer of Industrial Motors
Sales and Service Worldwide Cleveland, Ohio 44117-1199 U.S.A.
Toronto M4G 2B9 – Canada • Sydney 2211 – Australia • Rouen 76120 – France

Eff. April '89 Ram

Litho in U.S.A.

AIR DIRECTIONAL VALVES

BASIC DOUBLE-WALL CYLINDER DRAWING

DW SERIES

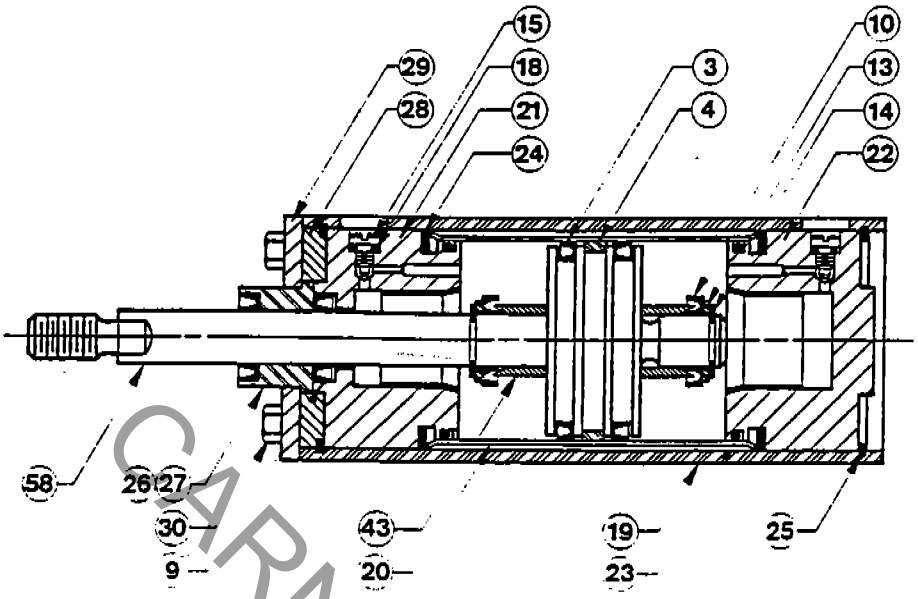

No.	Description	Quantity
3	Piston Seal	2
4	Piston Bearing Ring	1
9	Rod Seal	1
10	Cushion Seal	2
13	Cushion B/U Washer	2
14	Cushion Retaining Ring	2
15	Cushion Adjusting Screw	2
18	O-Ring (Cushion Screws)	2
19	Tie Tube	1
20	Stainless Steel Body	1
21	Head	1
22	Cap	1
23	O-Ring (Stainless Steel Body)	2
24	Wave Spring	1
25	Retaining Ring (Tie-Tube)	2
26	Rod Wiper (W/O Bushing)	1
27	Rod Wiper Bushing Assembly	1
28	Spacer	1
29	Retaining Plate	1
30	Screw (Retaining Plate)	4
43	Cushion Sleeve	2
58	Piston/Rod Assembly	1

CDW-01156

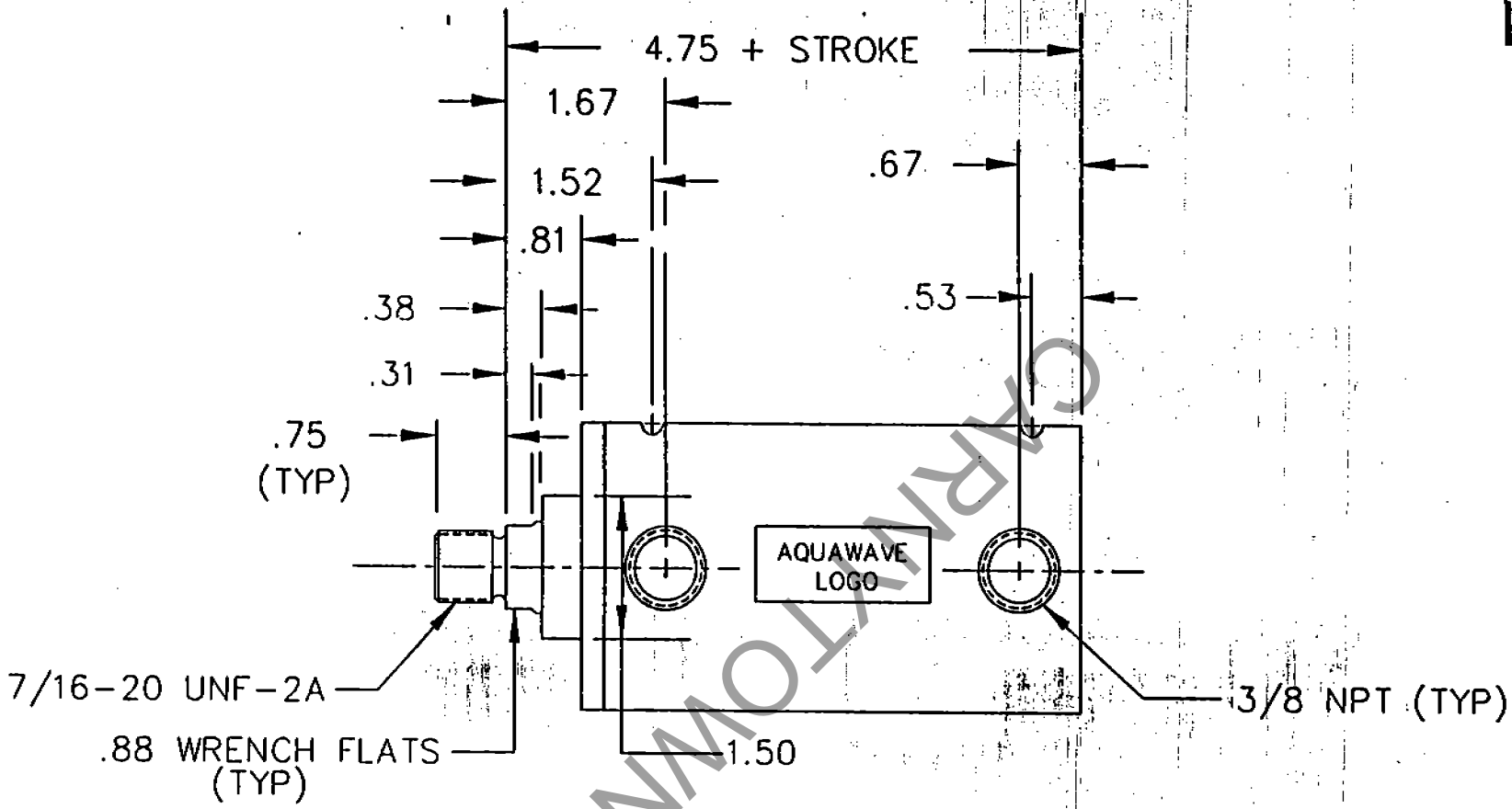

SPECIAL FEATURES
- ANODIZED END CAPS
- TEFLON COATED SEALS FOR LOW FRICTION
- VITON ROD WIPER

PROPRIETARY DRAWING

NO.	CHANGE	DATE
1	ADDED VITON OPTION	8/28/90 RLG

SCALE: .5: 1	DATE: 9/26/89	DRN. BY: CMM	CHK. BY:

MODEL: CDW-01156-A

DWC-500-V-SR2 SPEC. GEN. STRO

2.50 CORE CDW-01156

Q-55377

SPECIAL REPAIR KIT FOR CDW-01156-A
CONSISTING OF:

BASIC REPAIR KIT (K-B-50-V SPEC.)	(2) BODY RETAINER RINGS (SPEC.) (2) BODY O'RINGS (1) WAVE SPRING (2) PISTON SEALS (SPEC.) (1) WEAR RING
ROD SEAL REPAIR KIT (K-A-S-V SPEC.)	(1) BUSHING/WIPER ASS'Y (SPEC.) (1) ROD SEAL (SPEC.)
CUSHION REPAIR KIT (K-C-S-V SPEC.)	(2) CUSHION ADJ. SCREWS (2) CUSHION O'RINGS (SPEC.) (2) CUSHION SEALS (SPEC.) (2) CUSHION BACKUP WASHERS (2) CUSHION RET. RINGS

PNEUMATIC SYSTEM

SERVICE MANUAL

Models
F26-02-000, F26-03-000 & F26-04-000
with Variations and Accessories

LL-F26-9SM
NOVEMBER 1986

REPLACES SERVICE MANUAL PAGE: GC-F26-9SM

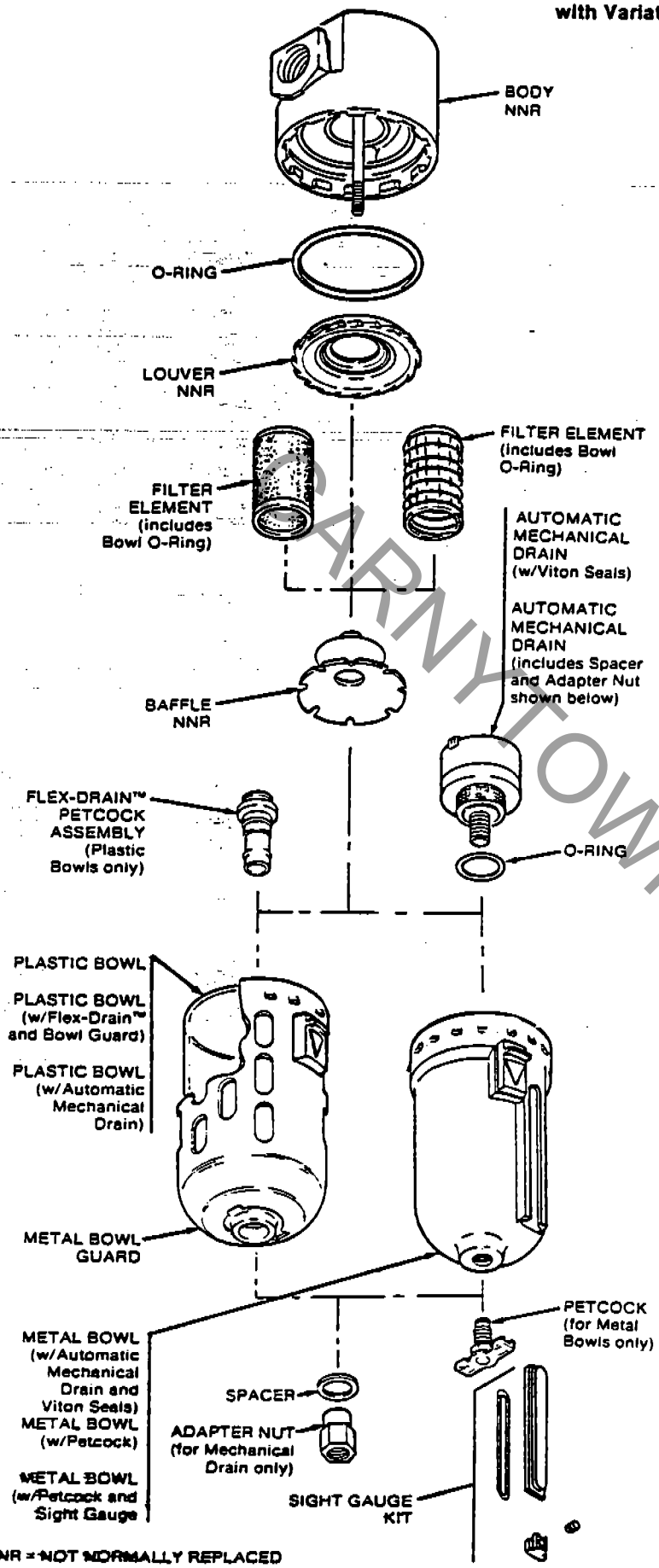

NNR = NOT NORMALLY REPLACED

WARNING

DO NOT PLACE PLASTIC BOWL UNIT IN SERVICE WITHOUT METAL BOWL GUARD INSTALLED.

Plastic bowl units are sold only with metal bowl guards. To minimize the danger of flying fragments in the event of plastic bowl failure, the metal bowl guards should not be removed. If the unit is in service without the metal bowl guard installed, manufacturer's warranties are void, and the manufacturer assumes no responsibility for any resulting loss.

IF UNIT HAS BEEN IN SERVICE AND DOES NOT HAVE A METAL BOWL GUARD, ORDER ONE AND INSTALL BEFORE PLACING BACK IN SERVICE.

CAUTION

Certain compressor oils, chemicals, household cleaners, solvents, paints and fumes will attack plastic bowls and can cause bowl failure. Do not use near these materials. When bowl becomes dirty replace bowl or wipe only with a clean, dry cloth. Reinstall metal bowl guard or buy and install a metal bowl guard. Immediately replace any crazed, cracked, damaged or deteriorated plastic bowl with a metal bowl or a new plastic bowl and a metal bowl guard.

SOME OF THE MATERIALS THAT WILL ATTACK POLYCARBONATE PLASTIC BOWLS

Acetaldehyde	Chlorobenzene	Methylene chloride
Acetic acid (conc.)	Chloroform	Methylene salicylate
Acetone	Cresol	Milk of lime (CaOH)
Acrylonitrile	Cyclohexanol	Nitric acid (conc.)
Ammonia	Cyclohexanone	Nitrobenzene
Ammonium flouride	Cyclohexene	Nitrocellulose laquer
Ammonium hydroxide	Dimethyl formamide	Phenol
Ammonium sulfide	Dioxane	Phosphorous hydroxychlorde
Anerobic adhesives & sealants	Ethane tetrachloride	Phosphorous trichloride
Antifreeze	Ethyl acetate	Propionic acid
Benzene	Ethyl ether	Pyridine
Benzoic acid	Ethylamine	Sodium hydroxide
Benzyl alcohol	Ethylene chlorohydrin	Sodium sulfide
Brake fluids	Ethlene dichloride	Styrene
Bromobenzene	Ethlene glycol	Sulfuric acid (conc.)
Butyric acid	Formic acid (conc.)	Sulphural chloride
Carbolic acid	Freon (refrig. & propell.)	Tetrahydronaphthalene
Carbon disulfide	Gasoline (high aromatic)	Tiophene
Carbon tetrachloride	Hydrazine	Toluene
Caustic potash solution	Hydrochloric acid (conc.)	Turpentine
Caustic soda solution	Lacquer thinner	Xylene
	Methyl alcohol	Perchlorethylene and others

TRADE NAMES OF SOME COMPRESSOR OILS, RUBBER COMPOUNDS AND OTHER MATERIALS THAT WILL ATTACK POLYCARBONATE PLASTIC BOWLS

Atlas "Perma-Guard"	National Compound #N11
Buna N	"Nylock" VC-3
Cellulube #150 and #220	Parco #1306 Neoprene
Crylex #5 cement	*Permabond #910
*Eastman 910	Petron PD287
Garlock #98403 (polyurethane)	Prestone
Haskel #568-023	Pydraul AC
Hilgard Co.'s hil phene	Sears Regular Motor Oil
Houghton & Co. oil #1120, #1130 and #1055	Sinclair oil "Lily White"
Houtosale 1000	Stauffer Chemical FYRQUEL #150
Kano Kroil	Stillman #SR 269-75 (polyurethane)
Keystone penetrating oil #2	Stillman #SR 513-70 (neoprene)
*Loctite 271	Tannergas
*Loctite 290	Telar
*Loctite 601	Tenneco anderol #495 and #500 oils
*Loctite Teflon-Sealant	Titon
Marvel Mystery Oil	*Vibra-lite
Minn. Rubber 366Y	Zerex

*When in raw liquid form.

WE CANNOT POSSIBLY LIST ALL HARMFUL SUBSTANCES, SO CHECK WITH A MOBAY CHEMICAL OR GENERAL ELECTRIC OFFICE FOR FURTHER INFORMATION ON POLYCARBONATE PLASTIC.

CAUTION

Except as otherwise specified by the manufacturer, this product is specifically designed for compressed air service, and use with any other fluid (liquid or gas) is a misapplication. For example, use with or injection of certain hazardous liquids or gases in the system (such as alcohol or liquid petroleum gas) could be harmful to the unit or result in a combustible condition or hazardous external leakage. Manufacturer's warranties are void in the event of misapplication, and manufacturer assumes no responsibility for any resulting loss. Before using with fluids other than air, or for non-industrial applications, or for life support systems consult manufacturer for written approval

(see Installation and Maintenance instructions on reverse side)

Printed in U.S.A

INSTALLATION

1. Refer to warning on front page.
2. Install as close as possible to point where is being used.
3. Install the unit with the air flowing through the body in the direction indicated by the arrow.
4. Install the same size unit as the pipe line in use. Avoid using fittings, couplings, etc., that restrict the airflow.
5. Do not install this unit in any application where the pressure drop will exceed 20 psi (1.4 bar). Downstream from a quick opening valve, for example, could cause a momentary pressure drop in excess of 20 psi (1.4 bar).
6. A drain line with ⅛" NPT connection may be attached to the drain port if desired. Drain line should be ¼" tubing or larger, as short as possible, and crimp-free
7. Maximum pressure and temperature ratings are: transparent plastic bowls, 150 psig (10.3 bar) and 125°F (52°C); metal bowls, 200 psig (14 bar) and 175°F (79.4°C).
8. Install unit in a vertical position.

MAINTENANCE

1. EACH TIME BOWL IS CLEANED OR THE FILTER ELEMENT REPLACED:
   A. Depressurize unit.
   B. Inspect seals and replace crazed, cracked, damaged or deteriorated seals with original manufacturer's approved seals only.
2. A. IF UNIT HAS A RIGID (FELT) FILTER ELEMENT, remove and clean periodically by tapping on hard surface and blowing off with air blow gun.
   B. IF UNIT HAS SOFT CLOTH ELEMENT, replace with a new one at least every six months, or sooner, if it looks dirty or causes excessive pressure drop (10 psi (0.7 bar) or more at rated flow).
3. A. IF UNIT IS EQUIPPED WITH MECHANICAL DRAINER:
   1. Clean the small screen around the drain seat each time the element is cleaned or changed by removing adapter nut and removing drain assembly. Clean screen by blowing off with air blow gun.
   2. For mechanical drainer repair see 9SM-95-714.
4. Before placing unit in service be sure that the bowl and bowl guard are reinstalled and securely locked in position.

REPAIR KITS AND REPLACEMENT PARTS

Repair Kit (Type A Element)	FRP-95-115
Type X Oil Removing Element Kit	FRP-95-206
Bowl O-Ring Kit	GRP-95-955
Bulk Pak Element Kit (Type A)	GRP-95-268
Bulk Pak Element Kit (Type X)	FRP-95-269
Transparent Plastic Bowl Kits:	
Plastic Bowl only	GRP-95-929
w/Auto. Mech. Drain & Bowl Guard	GRP-95-948
w/Flexible Drain & Bowl Guard	GRP-95-935
Metal Bowl Kits:	
w/Auto. Mech. Drain & Viton Seals	GRP-95-937
w/Petcock & Sight Gauge	GRP-95-931
w/Petcock	GRP-95-930
Drain Kits:	
Flexible Drain	FRP-95-610
Automatic Mechanical Drain	GRP-95-714
Auto. Mech. Drain w/Viton Seals	GRP-95-914
Brass Petcock Kit	GRP-95-182
Bowl Guard	GRP-95-936

ACCESSORIES

Sight Gauge (for Metal Bowl)	GRP-95-932

SERVICE MANUAL

Standard Modular MICROaïscer®
Filter Models M26-02-000
M26-03-000 and M26-04-000
with Variations and Accessories

KC-M26-9SM
MARCH 1985

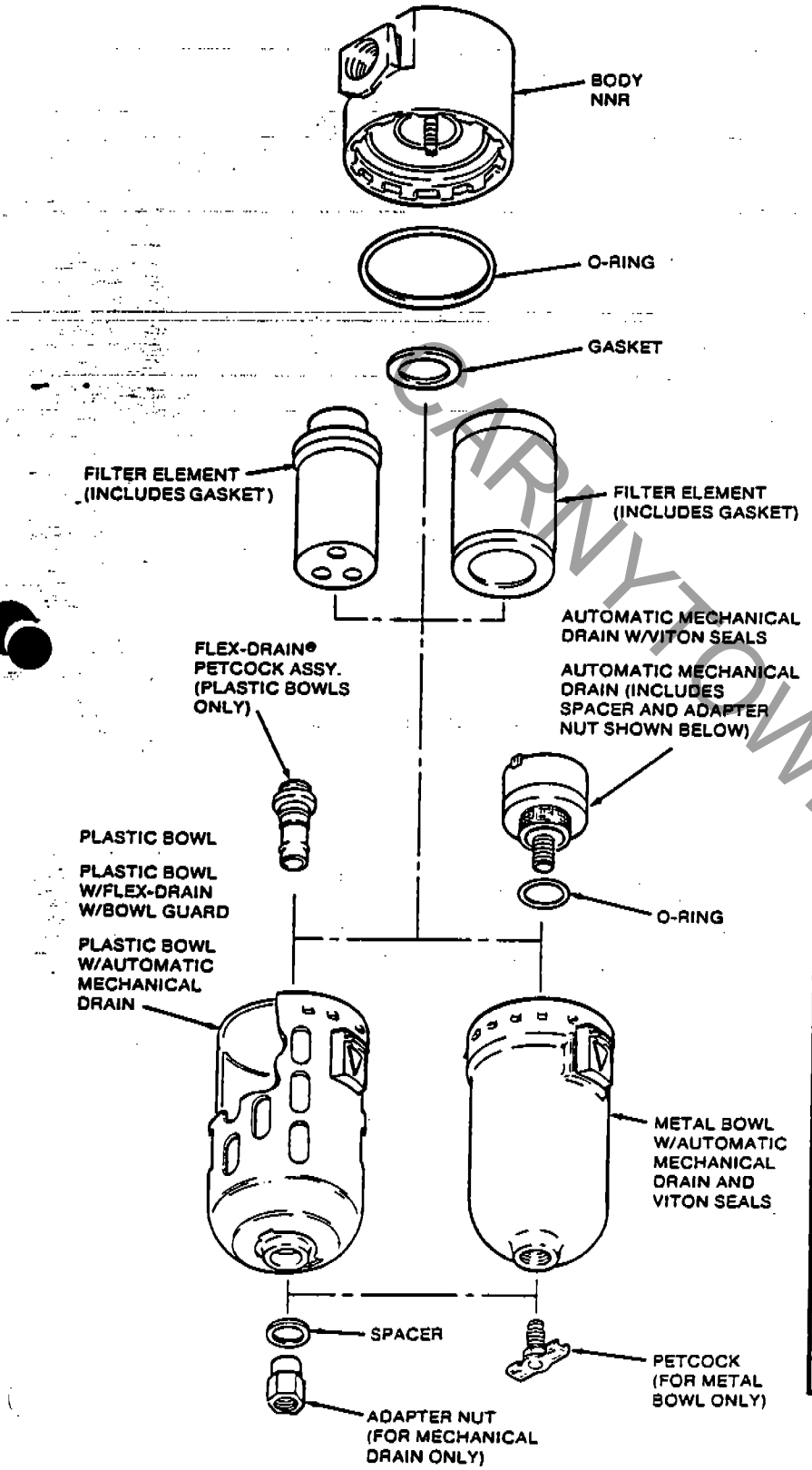

WARNING

DO NOT PLACE PLASTIC BOWL UNIT IN SERVICE WITHOUT METAL BOWL GUARD INSTALLED.

Plastic bowl units are sold only with metal bowl guards. To minimize the danger of flying fragments in the event of plastic bowl failure, the metal bowl guards should not be removed. If the unit is in service without the metal bowl guard installed, manufacturer's warranties are void, and the manufacturer assumes no responsibility for any resulting loss.

IF UNIT HAS BEEN IN SERVICE AND DOES NOT HAVE A METAL BOWL GUARD, ORDER ONE AND INSTALL BEFORE PLACING BACK IN SERVICE.

CAUTION

Certain compressor oils, chemicals, household cleaners, solvents, paints and fumes will attack plastic bowls and can cause bowl failure. Do not use near these materials. When bowl becomes dirty replace bowl or wipe only with a clean, dry cloth. Reinstall metal bowl guard or buy and install a metal bowl guard. Immediately replace any crazed, cracked, damaged or deteriorated plastic bowl with a metal bowl or a new plastic bowl and a metal bowl guard.

SOME OF THE MATERIALS THAT WILL ATTACK POLYCARBONATE PLASTIC BOWLS

Acetaldehyde	Chlorobenzene	Methylene chloride
Acetic acid (conc.)	Chloroform	Methylene salicylate
Acetone	Cresol	Milk of lime (CaOH)
Acrylonitrile	Cyclohexanol	*Nitric acid (conc.)
Ammonia	Cyclohexanone	Nitrobenzene
Ammonium fluoride	Cyclohexene	Nitrocellulose lacquer
Ammonium hydroxide	Dimethyl formamide	Phenol
Ammonium sulfide	Dioxane	Phosphoroushydroxychloride
Anerobic adhesives & sealants	Ethane tetrachloride	Phosphorous trichloride
Antifreeze	Ethyl acetate	Propionic acid
Benzene	Ethyl ether	Pyridine
Benzoic acid	Ethylamine	Sodium hydroxide
Benzyl alcohol	Ethylene chlorohydrin	Sodium sulfide
Brake fluids	Ethlene dichloride	Styrene
Bromobenzene	Ethlene glycol	Sulfuric acid (conc.)
Butyric acid	Formic acid (conc.)	Sulphural chloride
Carbolic acid	Freon (refrig. & propell.)	Tetrahydronaphthalene
Carbon disulfide	Gasoline (high aromatic)	Tiophene
Carbon tetrachloride	Hydrazine	Toluene
Caustic potash solution	Hydrochloric acid (conc.)	Turpentine
Caustic soda solution	Lacquer thinner	Xylene
	Methyl alcohol	Perchlorethylene and others

TRADE NAMES OF SOME COMPRESSOR OILS, RUBBER COMPOUNDS AND OTHER MATERIALS THAT WILL ATTACK POLYCARBONATE PLASTIC BOWLS

Atlas "Perma-Guard"	National Compound #N11
Buna N	"Nylock" VC-3
Cellulube #150 and #220	Parco #1306 Neoprene
Crylex #5 cement	*Permabond #910
*Eastman 910	Petron P0287
Garlock #98403 (polyurethane)	Prestone
Haskel #568-023	Pydraul AC
Hilgard Co.'s hil phene	Sears Regular Motor Oil
Houghton & Co. oil #1120, #1130 and #1055	Sinclair oil "Lily White"
Houtosafe 1000	Stauffer Chemical FYROQUEL #150
Kano Kroil	Stillman #SR 269-75 (polyurethane)
Keystone penetrating oil #2	Stillman #SR 513-70 (neoprene)
*Loctite 271	Tannergas
*Loctite 290	Telar
*Loctite 601	Tenneco anderol #495 and #500 oils
*Loctite Teflon-Sealant	Titon
Marvel Mystery Oil	*Vibra-tite
Minn. Rubber 366Y	Zerex

*When in raw liquid form.

WE CANNOT POSSIBLY LIST ALL HARMFUL SUBSTANCES. SO CHECK WITH A MOBAY CHEMICAL OR GENERAL ELECTRIC OFFICE FOR FURTHER INFORMATION ON POLYCARBONATE PLASTIC.

CAUTION

Except as otherwise specified by the manufacturer, this product is specifically designed for compressed air service, and use with any other fluid (liquid or gas) is a misapplication. For example, use with or injection of certain hazardous liquids or gases in the system (such as alcohol or liquid petroleum gas) could be harmful to the unit or result in a combustible condition or hazardous external leakage. Manufacturer's warranties are void in the event of misapplication, and manufacturer assumes no responsibility for any resulting loss. Before using with fluids other than air, or for non-industrial applications, or for life support systems consult Wilkerson Corporation for written approval.

(see Installation and Maintenance Instructions on reverse side)

NNR = NOT NORMALLY REPLACED

Printed in U.S.A.

INSTALLATION

1. Refer to above warning.
2. Purge downstream air line of oil.
3. Install as close as possible to point where air is being used.
4. Install the unit with the air flowing in the direction indicated by arrow on the body.
5. A drain line with ⅛" NPT connection may be attached to drain port if desired. Drain line should be ¼" tubing or larger, as short as possible, and crimp free.
6. Maximum inlet pressure and operating temperature ratings are: transparent plastic bowls, 150 psig (10.3 bar) and 125°F (51.7°C); metal bowls, 250 psig (17 bar) and 175°F (79°C).

TYPICAL INSTALLATION (not to scale)

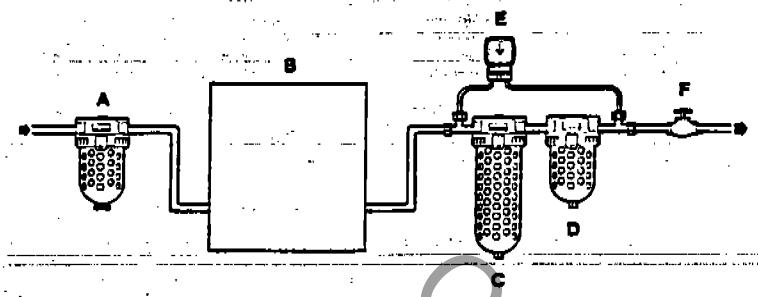

A. PREFILTER - It is recommended that a Wilkerson 5-micron-rated prefilter, be installed upstream from the coalescer filter to prolong element life.
B. AIR DRYER - (refrigerative or Twin Tower) An air dryer is generally preferred for optimum results, but is optional.
C. COALESCER FILTER - Do not touch the filter element once it has been put into service; the slightest pressure on the outer foam cover can easily damage it once it has been used.
D. AC PAK - The Type D element is an adsorption type for removing oil vapors, oil-associated odors, whether petroleum-base or synthetic base, and nearly 100% of any remaining solid contaminants. Element service life is approximately 2000 hours.
E. DIFFERENTIAL PRESSURE GAUGE - Maximum recommended pressure drop across coalescer filters is 10 psi (0.7 bar). This can be monitored by installing a Wilkerson differential pressure gauge.
F. VALVE - Do not use a valve or shutoff device in conjunction with a coalescer filter that will allow a momentary or surge pressure drop greater than 50 psi (3.4 bar). To avoid high surges which can either ruin the element or momentarily allow downstream contamination, use a slow-opening type valve.

MAINTENANCE

1. The element operates effectively when it is saturated. The element's useful life will end only when the resistance to flow becomes too high or the maximum permissible pressure is reached. The element cannot be cleaned or reused and must be replaced at the end of its useful life.
2. IF THE UNIT HAS A MANUAL DRAIN, drain the unit once per shift. IF UNIT IS EQUIPPED WITH AUTOMATIC MECHANICAL DRAIN,
   a. Clean the small screen around the drain seat each time the element is cleaned or changed by removing adapter nut and removing drain assembly. Clean screen by blowing off with air blow gun.
   b. For Automatic Mechanical Drain repairs see Service Manual sheet.
3. When bowl becomes dirty, replace the bowl or clean by wiping with a dry, clean cloth.
4. Before placing the unit in service, make sure that the bowl and bowl guard are reinstalled, and securely locked in place.

REPAIR KITS AND REPLACEMENT PARTS

Bowl O-Ring Kit	GRP-95-955
Type D Element Kit	MXP-95-540
Type C Element Kit	MTP-95-549
Flexible Drain	FRP-95-810
Automatic Mechanical Drain w/Viton Seals	GRP-95-714
Plastic Bowl	GRP-95-929
w/Flexible Drain w/Bowl Guard	GRP-95-935
w/Auto. Mech. Drain & Viton Seals	GRP-95-948
Bowl Guard	GRP-95-936
Metal Bowl w/Manual Drain	GRP-95-930
w/Auto. Mech. Drain & Viton Seals	GRP-95-937

ACCESSORIES

Wall Mounting Bracket	GPA-95-946

SERVICE MANUAL

MH- R16 -9SM
AUGUST 1987

Modular Regulator
Models R16-02-000, R16-03-000 & R16-04-000
with Variations and Accessories

Replaces Service Manual
KC-R16-9SM

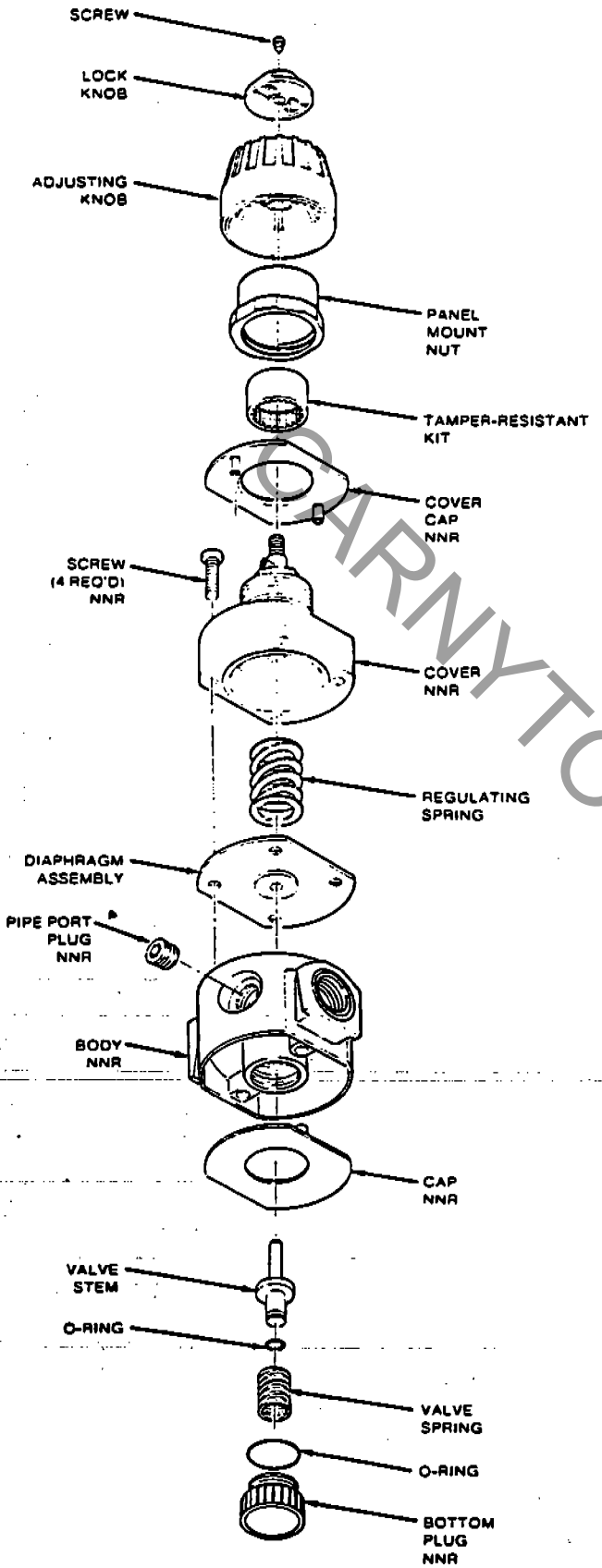

CAUTION

EXCEPT as otherwise specified by manufacturer, this product is specifically designed for compressed air service, and use with any other fluid (liquid or gas) is a misapplication. For example, use with or injection of certain hazardous liquids or gases in the system (such as alcohol or liquid petroleum gas) could be harmful to the unit or result in a combustible condition or hazardous external leakage. Manufacturer's warranties are void in the event of misapplication and manufacturer assumes no responsibility for any resulting loss.

The relief flow capacity of relieving type regulators is limited. Under some operating conditions, the secondary (outlet) pressure could increase above the initial setting. If over-pressure conditions could cause malfunction or failure of downstream equipment, additional external pressure relief devices of suitable capacity must be installed.

Before using with fluids other than air, for non-industrial applications, or for life support systems, consult manufacturer for written approval.

INSTALLATION

1. Install as close as possible to where regulated air is needed.
2. Install the unit with the air flowing through the body in the direction indicated by the arrow.
3. Install the same pipe size unit as the pipe line in use. Avoid using fittings, couplings, etc., that restrict the airflow, unless maximum flow is not needed.
4. Regulator may be installed with the adjusting knob in any position. Attach gauge to one ¼" female gauge port and plug the other ¼" female port, or use it as a regulated outlet port.
5. Turning the adjusting screw clockwise increases the regulated pressure and turning it counterclockwise decreases the regulated pressure.
6. Panel mount regulators require a 1⅞" diameter hole and are mountable on panels from ⅛" to ½" thick.
7. Maximum inlet pressure and operating temperature ratings are 300 psig (21 bar) and 175°F (79°C).

MAINTENANCE

1. The regulator can be disassembled for servicing without removal from line.
2. Occasionally remove bottom plug and clean plug, body and valve seat (vent air line on both sides of regulator).
3. TO DISASSEMBLE - shut off air to regulator and vent air line on both sides of regulator. Turn adjusting knob counterclockwise to relieve compression on spring. Remove screw, lock knob, adjusting knob (panel mount nut, if used), tamper-resistant kit (on tamper-resistant models) and cover cap. Remove the four screws, cover and regulating spring. Diaphragm assembly can now be removed. By removing bottom plug and spring the valve stem can be removed from the bottom of the regulator.
4. IF UNIT WILL NOT REGULATE TO PRESSURE NEEDED OR IF PRESSURE BECOMES EXCESSIVE - remove bottom plug, spring, and valve assembly. Clean and check o-ring, valve stem and valve seat for water damage. Replace worn or damaged parts. Install Repair Kit No. RRP-95-131 for self-relieving models, and Repair Kit No. RRP-95-132 for nonrelieving models for complete overhaul.
5. IF UNIT LEAKS AT RELIEF PORT, install proper repair kit as listed on back of this Service Manual.
6. WHEN REPLACING DIAPHRAGM ASSEMBLY - Diaphragm assembly RRP-96-213 includes relieving disk seal (not shown) installed. Seal not required on nonrelieving models.
7. TO REPLACE O-RING - This o-ring is above a metal washer which cannot be removed. Using a pointed probe of some kind, pull o-ring out. Force new o-ring through washer hole into o-ring cavity.

(see reverse side for Repair Kits and Accessories)

NNR = NOT NORMALLY REPLACED

Printed in U.S.A.

REPAIR KITS AND REPLACEMENT PARTS

SELF-RELIEVING REPAIR KIT (includes self-relieving diaphragm assy. valve stem. valve spring. and o-rings)	RRP-95-131
NONRELIEVING REPAIR KIT (includes nonrelieving diaphragm assy. valve stem valve spring. and o-rings)	RRP-95-132
Regulating Springs:	
0-50 psi	RRP-95-222
0-125 psi	RRP-95-224
0-250 psi	RRP-95-218
Self-Relieving Diaphragm Kit	RRP-96-213
Nonrelieving Diaphragm Kit	RRP-96-216
Valve Assembly (valve stem. valve spring)	RRP-96-214
Adjusting Knob Assembly	RRP-95-007

ACCESSORIES

Panel Nut	GPA-95-032
Wall Mounting Bracket	GPA-95-012
Wall Mounting Bracket with Panel Nut	GPA-95-011
Wall Mounting Bracket (Combo's)	RRP-95-090
Tamper Resistant Kit	RPA-95-006
Gauges:	
0-60 psig	RRP-95-230
0-160 psig	GRP-95-229
0-300 psig	RRP-95-231

SERVICE MANUAL

EconOmist® Lubricator Models
L16-02-000, L16-03-000, L16-04-000
with Variations and Accessories

KC- L16 -9SM
MARCH 1985

REPLACES SERVICE MANUAL
HM- L16 -9SM

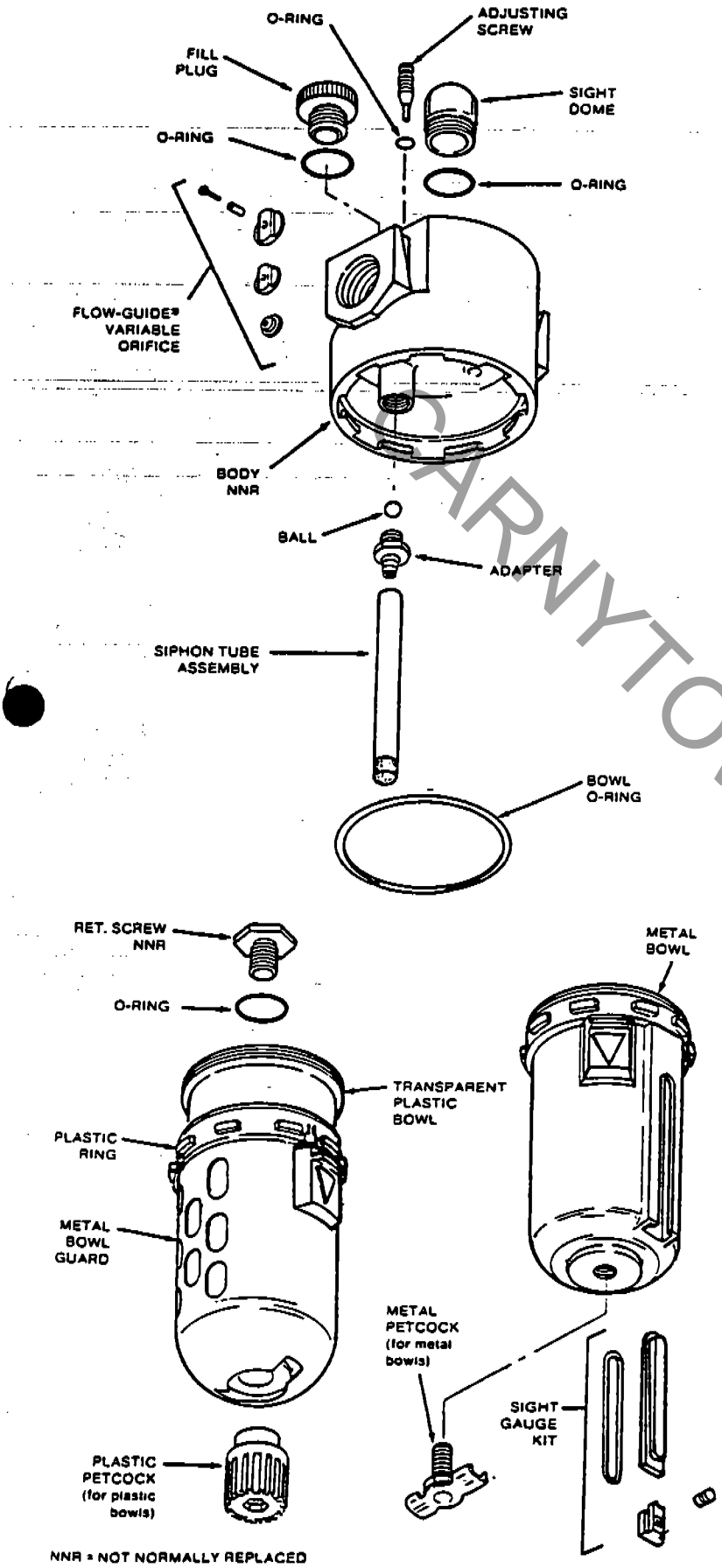

NNR = NOT NORMALLY REPLACED

WARNING

DO NOT PLACE PLASTIC BOWL UNIT IN SERVICE WITHOUT METAL BOWL GUARD INSTALLED.

Plastic bowl units are sold only with metal bowl guards. To minimize the danger of flying fragments in the event of plastic bowl failure, the metal bowl guards should not be removed. If the unit is in service without the metal bowl guard installed, manufacturer's warranties are void, and the manufacturer assumes no responsibility for any resulting loss.

IF UNIT HAS BEEN IN SERVICE AND DOES NOT HAVE A METAL BOWL GUARD, ORDER ONE AND INSTALL BEFORE PLACING BACK IN SERVICE.

CAUTION

Certain compressor oils, chemicals, household cleaners, solvents, paints and fumes will attack plastic bowls and can cause bowl failure. Do not use near these materials. When bowl becomes dirty replace bowl or wipe only with a clean, dry cloth. Reinstall metal bowl guard or buy and install a metal bowl guard. Immediately replace any crazed, cracked, damaged or deteriorated plastic bowl with a metal bowl or a new plastic bowl and a metal bowl guard.

SOME OF THE MATERIALS THAT WILL ATTACK POLYCARBONATE PLASTIC BOWLS

Acetaldehyde	Chlorobenzene	Methylene chloride
Acetic acid (conc.)	Chloroform	Methylene salicylate
Acetone	Cresol	Milk of lime (CaOH)
Acrylonitrile	Cyclohexanol	Nitric acid (conc.)
Ammonia	Cyclohexanone	Nitrobenzene
Ammonium flouride	Cyclohexene	Nitrocellulose lacquer
Ammonium hydroxide	Dimethyl formamide	Phenol
Ammonium sulfide	Dioxane	Phosphorous hydroxychloride
Anerobic adhesives & sealants	Ethane tetrachloride	Phosphorous trichloride
Antifreeze	Ethyl acetate	Propionic acid
Benzene	Ethyl ether	Pyridine
Benzoic acid	Ethylamine	Sodium hydroxide
Benzyl alcohol	Ethylene chlorohydrin	Sodium sulfide
Brake fluids	Ethlene dichloride	Styrene
Bromobenzene	Ethlene glycol	Sulfuric acid (conc.)
Butyric acid	Formic acid (conc.)	Sulphuryl chloride
Carbolic acid	Freon (refrig. & propell.)	Tetrahydronaphthalene
Carbon disulfide	Gasoline (high aromatic)	Tiophene
Carbon tetrachloride	Hydrazine	Toluene
Caustic potash solution	Hydrochloric acid (conc.)	Turpentine
Caustic soda solution	Lacquer thinner	Xylene
	Methyl alcohol	Perchlorethylene and others

TRADE NAMES OF SOME COMPRESSOR OILS, RUBBER COMPOUNDS AND OTHER MATERIALS THAT WILL ATTACK POLYCARBONATE PLASTIC BOWLS

Atlas "Perma-Guard"	National Compound #N11
Buna N	"Nylock" VC-3
Cellulube #150 and #220	Parco #1306 Neoprene
Crylex #5 cement	*Permabond #910
*Eastman 910	Petron P0287
Garlock #98403 (polyurethane)	Prestone
Haskel #568-023	Pydraul AC
Hilgard Co.'s hil phene	Sears Regular Motor Oil
Houghton & Co. oil #1120, #1130 and #1055	Sinclair oil "Lily White"
Houtosafe 1000	Stauffer Chemical FYROQUEL #150
Kano Kroil	Stillman #SR 269-75 (polyurethane)
Keystone penetrating oil #2	Stillman #SR 513-70 (neoprene)
*Loctite 271	Tannergas
*Loctite 290	Telar
*Loctite 601	Tenneco anderol #495 and #500 oils
*Loctite Teflon-Sealant	Triton
Marvel Mystery Oil	*Vibra-tite
Minn. Rubber 366Y	Zerex

*When in raw liquid form

WE CANNOT POSSIBLY LIST ALL HARMFUL SUBSTANCES. SO CHECK WITH A MOBAY CHEMICAL OR GENERAL ELECTRIC OFFICE FOR FURTHER INFORMATION ON POLYCARBONATE PLASTIC.

CAUTION

Except as otherwise specified by the manufacturer, this product is specifically designed for compressed air service, and use with any other fluid (liquid or gas) is a misapplication. For example, use with or injection of certain hazardous liquids or gases in the system (such as alcohol or liquid petroleum gas) could be harmful to the unit or result in a combustible condition or hazardous external leakage. Manufacturer's warranties are void in the event of misapplication, and manufacturer assumes no responsibility for any resulting loss. Before using with fluids other than air, or for non-industrial applications, or for life support systems consult Wilkerson Corporation for written approval.

(see Installation and Maintenance Instructions on reverse side)

Printed in U.S.A.

INSTALLATION

1. Refer to above warning.
2. Install as close as possible to the equipment requiring lubrication.
3. Install the unit with the air flowing through the body in the direction indicated by arrow.
4. Install the same pipe-size unit as the pipeline in use. Avoid using fittings, couplings, etc., that restrict the airflow or baffle the oil out of the air at the lubricator outlet.

OPERATION

1. Maximum pressure and temperature ratings are: for transparent plastic bowls, 150 psig (10 bar) and 125°F (52°C); for metal bowls, 250 psig (17 bar) and 175°F (79°C).
2. The lubricator may be filled under pressure by removing the fill plug and pouring oil into the bowl through the fill port. NOTE: As the fill plug is removed the air pressure in the bowl will be released. The bowl may be taken off after the fill plug is removed if a more rapid fill is required. DO NOT replace the fill plug until the bowl and bowl guard are in position and the clamp ring is locked into place.
3. Use clean oil, preferably SAE 10 or lighter. The rate of oil delivery may be controlled by turning the adjusting screw counterclockwise for more and clockwise for less oil delivery. This L16 lubricator delivers all of the oil downstream that passes through the sight dome. The oil delivery rate will change automatically to deliver more oil during higher airflows, and less oil for airflows lower than that at which the original setting was made.

MAINTENANCE

1. Given clean operating conditions, this unit will be trouble-free. Drain off any contaminants which collect in the bottom of the bowl. Contaminants from dirty oil may collect on the siphon tube filter, requiring the filter to be washed in kerosene and blown off with an air blow gun.
2. IF THE OIL DELIVERY RATE DROPS, the lubricator should be cleaned. Shut off the air supply and reduce the pressure in the unit to zero. Remove the adjusting screw and clean the needle and seat in the body. Inspect and clean the passage from the needle seat down into the siphon tube adapter. Remove the Flow-Guide® variable orifice screw and clean its air passage with a small wire. Check the bore that the screw fits into for contaminants and clean if necessary. Be sure the passageway from the sight dome cavity downward is open. For plastic bowl units, the bowl may be cleaned by wiping with a clean dry cloth.

REPAIR KITS AND REPLACEMENT PARTS

O-RING REPAIR KIT (bowl, fill plug, adjusting screw and sight dome o-rings)	LRP-95-022
O-Ring Kit for Adjusting Screw (10 per kit)	GRP-95-255
Bowl O-Ring Kit	GRP-95-009
Bowl Guard Kit (includes plastic ring)	GRP-95-013
Button Head Fitting Kit (minimum order qty. 10)	LRP-96-047
Siphon Tube Assembly Kit	LRP-96-005
Sight Dome Kit	LRP-95-239
Fill Plug Kit	LRP-95-253
Flow-Guide® (¼" models)	LRP-95-241
Flow-Guide® (⅜", ½" models)	LRP-95-242
Transparent Plastic Bowl Kits:	
with plastic petcock	GRP-95-018
with bowl guard, plastic petcock	GRP-95-019
Plastic Petcock Kit	LRP-95-181
Metal Bowl Kits:	
with brass petcock, sight gauge	GRP-95-133

ACCESSORIES

Wall Mounting Bracket	GPA-95-016
Sight Gauge Kit (metal bowl units)	GRP-95-932
Tamper Resistant Kit	LRP-95-587
Force Fill Adaptor	GRP-96-394

Operators Manual and Parts List

SULLAIR®
COMPRESSOR

6E Series 5, 7½ and 10HP Rotary Screw Air Compressor

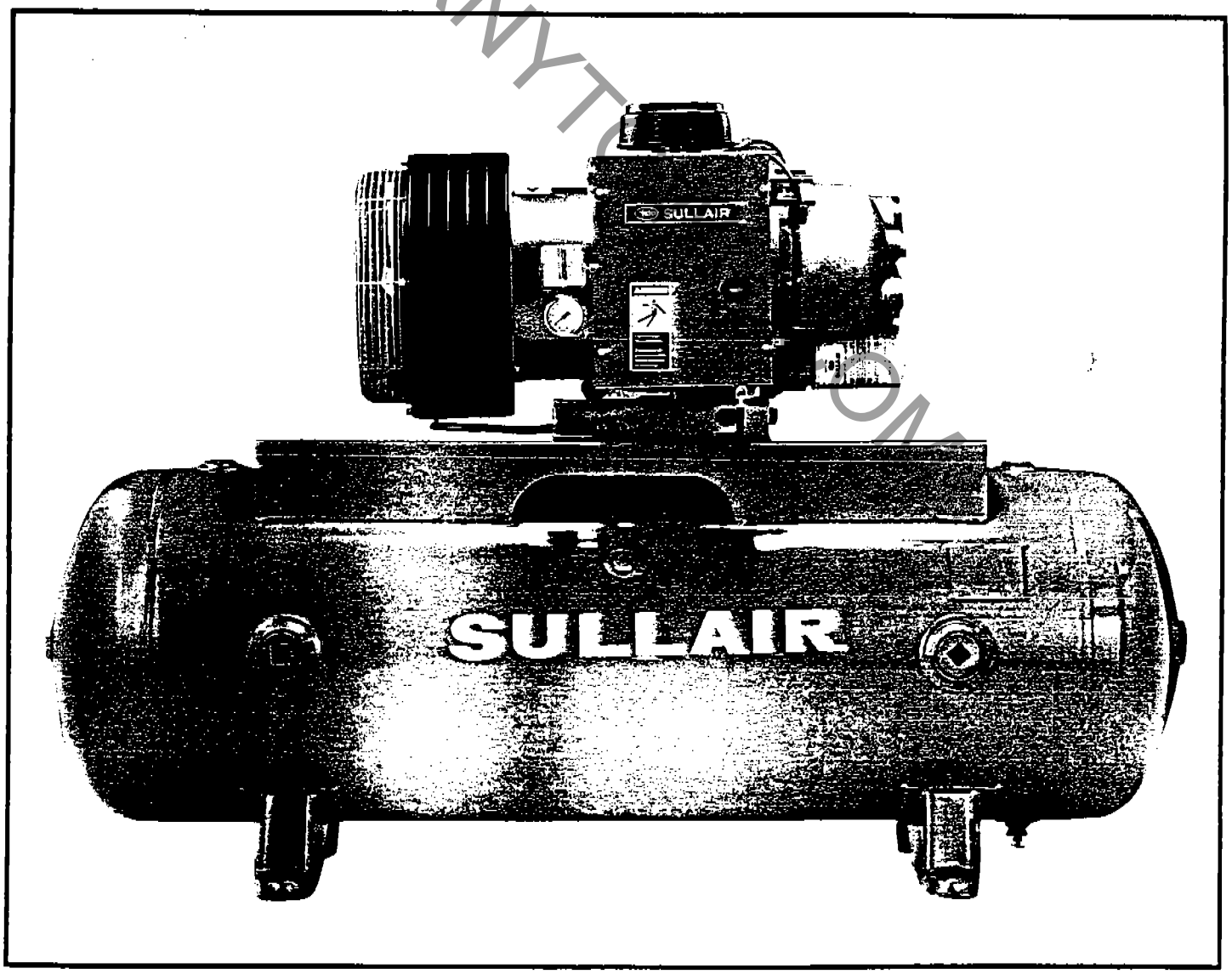

PRICE $50.00

WARRANTY

WARRANTY PERIOD COMMENCES AT START-UP PROVIDED REGISTRATION CARD IS RETURNED WITHIN TEN (10) DAYS OF MACHINE START-UP, BUT NOT LATER THAN TWELVE (12) MONTHS FROM SHIPMENT FROM FACTORY, OTHERWISE WARRANTY PERIOD COMMENCES THIRTY (30) DAYS AFTER DATE OF SHIPMENT FROM FACTORY.

The Sullair compressor unit, if used in accordance with manufacturer's instructions, is warranted for twelve (12) months against defects in materials and workmanship—and against loss of capacity due to wear. The unit will be replaced or repaired as a result of such defects. Disassembly of the air compressor by anyone other than an authorized Sullair repair facility will void this warranty and the unit exchange policy. This warranty does not apply to any unit damaged by accident, misuse or negligence. The warranty does not cover shipping expenses to and from Sullair's factory or other destination, designated by Sullair for repair or replacement of defective equipment.

THIS STATEMENT OF WARRANTY IS EXPRESSLY IN LIEU OF AND DISCLAIMS ALL OTHER EXPRESS WARRANTIES, IMPLIED WARRANTIES OF MERCHANTABILITY AND ALL OTHER IMPLIED WARRANTIES. THERE ARE NO WARRANTIES WHICH EXTEND BEYOND THE DESCRIPTION OF THE FACE HEREOF. THIS WARRANTY DOES NOT INCLUDE LIABILITY FOR INCIDENTAL OR CONSEQUENTIAL DAMAGES.

All claims under this warranty should be made by contacting your local Sullair Representative.

The above policy is printed on a Warranty Registration Card that is sent with every machine shipped by Sullair Corporation. The lower section of this card must be completed and returned to Sullair to make warranty valid.

SULLAIR CORPORATION
3700 E. MICHIGAN BLVD.
MICHIGAN CITY, INDIANA 46360

SULLAIR

Sullair Corporation
3700 East Michigan Blvd.
Michigan City, IN 46360-9990

Phone 219-879-5451
Telex 258353

PRODUCT SAFETY POLICY

May 15, 1984

It is Sullair Corporation's policy to produce and market the best product available commensurate with the safety and health needs of the customer.

Sullair's objective is to furnish a product that is safe for it's designed and intended use. It is Sullair's corporate desire that no Sullair product be the direct cause of an accident when used for its intended application.

Product safety shall be assured through systematic application of sound engineering and management principles in the conception, design, development, testing, manufacturing, sale and servicing of all products.

Adequate instructions and cautionary labels shall be utilized.

This is a reaffirmation of a policy existing at Sullair since its origin.

R. T. Bloomberg

Robert T. Bloomberg
President and Chief
Executive Officer

AQUATIC
AMUSEMENT
ASSOCIATES, LTD.

One of the Aquatic Development Group of companies.

10/24/94

Mr. Ron Safford
Chief Bureau of Fair Rides Inspection
3125 Conner Blvd., Bldg. #4
Tallahassee, FL. 32399-1650

Dear Mr. Safford,

With regard to your letter on July 25, 1994 I am enclosing a copy of our standard operating manual for a wave generation system. The system itself does not come in contact with the public. Waves generated by the system are the "ride". The ASTM-F-24 committee standards referenced in your letter do not readily apply to our system since these standards focus on mechanical devices that convey/hold riders.

If you have any additional questions regarding our wave systems please contact me at the following number 518- 783-0038.

Regards,

AQUATIC AMUSEMENT ASSOCIATES, LTD.

Jim Dunn
Director of Design & Engineering

JD/bh

WaveTek®
Products Division

P.O. Box 648
One Aquatic Center
Cohoes, New York 12047
Phone 518-783-0038 FAX 518-783-0474

Sales/Service offices in Denver, CO
Vero Beach, FL and Gastonia, NC.
Canadian affiliate:
Amusements Aquatiques, Canada, Inc.

AQUATIC AMUSEMENT ASSOCIATES, LTD.

Our third decade of wave/surf pools.

Wave/surf pool installations—United States

FACILITY NAME	LOCATION	OWNER
Alabama		
Point Mallard Park	Decatur	City of Decatur
Water World	Dothan	City of Dothan
Waterville USA	Gulf Shores	
Arizona		
The Oasis	Phoenix	Landward Recreation, Inc.
Breakers Family Waterpark	Marina	
Mesa Golfland	Mesa	
Kiwanis Park*	Tempe	City of Tempe
Waterworld USA	Phoenix	
Arkansas		
Wild River Country	N. Little Rock	Wild River Country, Ltd.
California		
Raging Waters	San Dimas	Bryant Morris Development
Clovis Lakes ▫	Clovis	
Oasis Waterpark ▫	Palm Springs	
Waterworld USA	Sacramento	
Wild Rivers at Lion Country ▫	LaGuna Hills	
Colorado		
Municipal Pool	Craig	City of Craig
Water World	Denver	Hyland Hills Park District
Water World—Thunder Bay†	Denver	Hyland Hills Park District
Florida		
Big Kahunas	Destin	Tropical Golf and Waterpark
Rapids Golf, Slide & Bankshot	West Palm Beach	Rapids Golf, Slide & Bankshot
Atlantis	Hollywood	Six Flags Corporation
Water Mania	Kissimmee	The Larson Group
Wet 'N Wild	Orlando	Wet 'N Wild, Inc.
Shipwreck Island	Panama City	Miracle Strip Amusement, Inc.
Wild Waters	Silver Springs	Silver Springs, Inc.
Adventure Island	Tampa	Anheuser-Busch
Georgia		
Lake Lanier - Children's Pool	Buford	Lake Lanier Islands Authority
Lake Lanier Islands	Buford	Lake Lanier Islands Authority
White Water	Marietta	Silver Dollar City, Inc.
Summer Waves	Jekyll Island	Jekyll Island State Park Authority
Illinois		
Aquatic Center*	Bolingbrook	Bolingbrook Park District
Lions Park	Mt. Prospect	Mt. Prospect Park District
Magic Waters	Rockford	Magic Waters, Ltd.
Indiana		
WaveTek	Clarksville	Louisville Sheraton
Iowa		
Ottumwa Wave Pool	Ottumwa	City of Ottumwa
Whitewater University	DesMoine	Aquaworld
Kansas		
Fanta Sea Park	Wichita	FS Management, Inc.
Kentucky		
The Sports Center	Lexington	Kentucky Central Corp.
Atlantis Swim Club	Owensboro	Atlantis Swim Club, Inc.
Breakers Swim & Tennis Club	Winchester	Breakers, Inc.

The largest wave generation equipment manufacturer in the world.

Wave/surf pool installations—International

FACILITY NAME	LOCATION	OWNER
Mexico		
Ixtapan Wave Pool	Ixtapan	Diversiones Acuaticas, SA de C.V.
Centro Infantil Convivencia Internacional	Acapulco	Federal Government of Mexico
El Tepozteco	Cuernavaca	Parques Nacionales (Natl. Pks. of Mexico)
Agua Caliente	Guadalajara	Hermanos Mestas
Balneario Rodriguez	Monterrey	Filiberto Rodriguez
Club Delago	Monterrey	Promotores Deportivos, S.A.
El Mundo De Agua Magica	San Miguel de Allende	Hacienda Taboada, S.A.
Spain♦		
Aqua City Surf Pool	El Areal	
Aqua City Wave Pool	El Areal	
Aqua Tropic	Almunecar	
Aquamadrid Surf Pool	Madrid	
Aquamadrid Wave Pool	Madrid	
Aquaola	Granada	
Aquapark Alcudia	Puerto de Alcudia	
Aquarama	Benicasism	
Guadalpark Sevilla	Sevilla	
Leganes	Madrid	
Maspalomas	Canary Islands	
Parque Aquatico	Mijas	
Puerto Sherry	Puerto des Maria	
Salou Water Park	Salou	
San Juan	Allicante	
Thailand♦		
Ocean World	Bang Saen	
The Netherlands♦		
Aquarenabad	Emmen	
De Blinkert	Capelle A/D Ijssel	
De Stienen Flier	Joure	
De Tongelreep	Rindhoven	
De Wellen	Drachten	
De Wissen	Helmond	
Groenendaal	Heemstede	
Hotel Oranje	Noordwijk	
Ijzerenman	Weert	
Kerkeland	De Koog, Texel	
Rec Center Roompot	Kamperland	
Scholtenhagen	Haaksbergen	
Sportfondsenbad	Vlissinsen	
Tropicambia	Ameland	
Duinrell Tikibad	Wassenaar	
Venezuela		
El Lago Maracaibo	Maracaibo	Varrick Investments
LaHacienda	Valencia	Varrick Investments
West Germany♦		
Aquadrome	Hockenheim	
Aquadrome Am Ruhrpark	Bochum	
Ballenbad "Betzdorf"	Betzdorf-Kirchen	

□ Pnuematic surfing pool installation
* Denotes Indoor Pool
† Tsunami
♦ European installations manufactured and sold by our European affiliate EDOCH b.v.

One of the Aquatic Development Group of companies.
Albany, New York 12205 USA

Florida Department of Agriculture & Consumer Services
BOB CRAWFORD, Commissioner

Please Respond To:
Bureau of Fair Rides Inspection
3125 Conner Blvd. Bldg. #4
Tallahassee, FL 32399-1650

CERTIFIED-RETURN RECEIPT REQUESTED

July 25, 1994

TO: Manufacturers of Amusement Devices/ Attractions

SUBJ: **MANUALS; NON-DESTRUCTIVE TESTING; FLORIDA'S ADOPTION OF AMERICAN SOCIETY FOR TESTING AND MATERIALS F-24 COMMITTEE STANDARDS ON AMUSEMENT RIDES AND DEVICES; MANUFACTURERS INFORMATION**

Effective October 1, 1989, the state of Florida, United States of America, adopted the American Society for Testing and Materials F-24 Committee Standards on Amusement Rides and Devices. To operate in Florida, all amusement devices and amusement attractions must comply with those standards. Please provide Florida with an English language manual for each of your devices and attractions, if you have not previously done so.

Also, please place my name and address on your list to receive copies of all new manuals; and service, maintenance, and safety bulletins or similar notices.

Florida state law requires an annual non-destructive test for metal fatigue. If your company recommends or requires a non-destructive test on any amusement device, please report all recommended or required tests to our office.

For each amusement device you manufacture, please provide the following information: (1) height restrictions; (2) weight restrictions; (3) passenger weight per seat or total passenger weight per vehicle; (4) revolutions per minute (rpm), if applicable, and; (5) direction of travel.

Thank you for providing the requested information to our state's amusement device and amusement attraction inspection program.

Sincerely,

BOB CRAWFORD
COMMISSIONER OF AGRICULTURE

Ron Safford, Chief
Bureau of Fair Rides Inspection
904/488-9790