2812-F Merrilee Drive
Fairfax, Virginia 22031

Tel: 703/849-9535
Fax: 703/573-4005

Surf Tek
Robo Surfer
Non-Kiddie

Operating & Maintenance Instructions

Robo Surfer

Aquatic Model

CARNYTOWN.COM

2812-F Merrilee Drive
Fairfax, Virginia 22031

Tel: 703/849-9535
Fax: 703/573-4005

SurfTek

Robo Surfer

Aquatic Model

CARNYTOWN.COM

The Aquatic Model of the Robo Surfer manufactured by SurfTek, Incorporated complies with the applicable provisions of:

ASTM
Standards on Amusement Rides and Devices

and specifically complies with sections

F698-88	**Physical Information to be Provided for Amusement Rides & Devices**
F770-88	**Operation Procedures for Amusement Rides & Devices**
F846-86	**Testing Performance of Amusement Rides & Devices**
F853-86	**Maintenance Procedures for Amusement Rides & Devices**
F1159-88	**The Design & Manufacture of Amusement Rides & Devices**
F1193-88	**An Amusement Ride and Device Manufacturer Quality Assurance Program**

2812-F Merritee Drive
Fairfax, Virginia 22031

Tel: 703/849-9535
Fax: 703/573-4005

SurfTek

Specifications

Robo Surfer

Aquatic Model

CARNYTOWN.COM

Framework: Robo Surfer framework is fabricated completely of 302/304 stainless steel with a dull haze finish for maximum resistance to deterioration from submersion in swimming pool water.

Hydraulic Power Unit: The Robo Surfer, Aquatic Model is powered by a Hydraulic Power Unit consisting of:

- Proportional Valve to Control Speed
- Heavy Duty Variable Axial Piston Pump
- AC Motor and Electrical Controls
- Hydraulic Reservoir
- Oil Filter
- 230/460 Volt, 3 Phase, 60 Hz, 20 Amp Service

Mounting: The framework is equipped with Vibration Isolation Mounting Hardware located on all four feet of the framework.

Mounting feet are supplied with stainless steel mounting hardware for mounting the unit on concrete with embedded anchors for maximum stability.

Components: All system components are heavy duty drive components

Weight: Framework Assembly - 320 pounds
Hydraulic Assembly - 450 pounds

--ooOoo--

2812-F Merrilee Drive
Fairfax, Virginia 22031

Tel: 703/849-9535
Fax: 703/573-4005

SurfTek

Operating & Maintenance Instructions

Robo Surfer

Aquatic Model

CARNYTOWN.COM

INTRODUCTION

The Robo Surfer is a device to simulate the action of a surf board in the ocean. It consists of a mechanical system to create the motion, a surf board on which the participant stands and attempts to maintain his/her balance, and an external power source consisting of a hydraulic power unit to power the mechanical system. A standard eight foot long surfboard rests on top of two arms of the frame with three directions of movement consisting of a longitudinally back and forth motion with a movement span of approximately 12" and a tilting motion in a front to back and side to side motion. The unit moves in a regular and repeated fashion which is operator controlled and which begins at the slowest possible movement and gradually increases as the rider achieves skill and balance

The mechanical system is mounted in a water environment, having a cushioned surrounding to protect the participant if they should lose their balance. The power for driving the system is external to the water environment, but controlled by an trained operator very near to the Robo Surfer so as to monitor the riders activity.

The ride operator should be placed in a location to conveniently control operation of the board including passenger loading and unloading, controlling of waiting lines and queues, the easy passage of instructions and information to riders and placed in a location so as to continuously observe the progress of the ride and the rider's balance and safety. Should this at any time require more than one operator then the facility owner operator must have operational procedures in place so that implementation of additional ride operator assistance is provided,

CARWYTOWN.COM

when needed.

Prior to mounting the surfboard, the rider should be instructed to read an operator/owner supplied sign at the entry/access/waiting areas of the ride. The sign should contain instructions which must be followed by the rider, and the ride operator must make sure that the rider does so. These are instructions which instruct the participants not to do radical dismounts but to step off the board when they begin to fall or to simply fall into the water. The instructions also stipulate that the rider must not dive head first and no flips are allowed. The operator should explain the basic technique of riding the surfboard and also give verbal instructions (and warnings repeating those shown on the signage) prior to and during the ride. The ride operator must maintain order and safety on the ride. The owner/operator supplied sign should also warn potential participants with pre-existing conditions or pre-existing injuries of a nature that could be aggravated by the ride (E.G. back, shoulder, leg, etc. injuries) that they should not ride on or participate in the ride. The warning should also extend to pregnant women.

CARNYTOWN.COM

The operator of the ride should is in close proximity to the rider and controls the action of the ride with the ride control box as required and according to the ability of the participant.

After the ride operator makes certain that the board is at a full stop with no passengers, the next rider approaches the surfboard. Depending on the design of the waiting area, the rider can approach the ride in order to load onto the ride from either side or from the rear end. The rider, at the surfboard steps onto either side of the surfboard and mounts the board. The easiest method of mounting the surfboard is for the rider to sit on the surface of the board and then lift

himself into a standing position on the board. The rider then establishes himself in the standing position as if he were riding a real surfboard. When he has his balance and the operator ascertains that the rider is comfortably balanced, the operator begins movement of the board with the ride control box at the slowest possible rate and the ride begins.

The ride terminates when the rider exits, dismounts or falls, the ride operators stops the ride or the rider signals or requests the ride operator to cease the ride. The rider is then directed to exit the ride area and the ride is in a full stop position until the next rider is adequately mounted.

No more than one rider at a time should be on or riding the surfboard and no riders exceeding 275 pounds should be allowed to use the ride.

Before commencing daily operations the ride should be thoroughly inspected. the inspector should insure that all mounting bolts are secure; insure all connections are tight on hoses; check fluid level to be certain it is adequate; run the ride a minimum of 15-30 seconds at normal operating speed prior to putting it into service; visually inspect frame, board and connections during test operation.

Before commencing each ride or ride cycle the ride operator should visually check the ride to make sure all couplings and connections appear to be tight and secure and that there are no evident leaks in the system and that the board and frame to which it is attached appear to be securely in place.

CARNYTOWN.COM

Operation of the ride is not recommended during inclement weather which would inhibit safe operation of the ride. If other rides are closed at a ride location due to inclement weather then the Robo Surfer should be closed also. The ride should not be operated when lightning is apparent in the immediate area.

It is recommended that an area of the water surrounding the board be kept clear so that in the event riders fall from the surfboard they will not hit or collide with any object except the surrounding water. The clear area must be of such a distance to prevent a rider coming into contact with any other people or objects.

This manual provides guidelines for the operation of the Robo Surfer. It is divided into several distinct area of operating the system, troubleshooting the hydraulic system, and various manufacturer's literature defining the quality of products incorporated into the system.

CARNYTOWN.COM

2812-F Merrilee Drive
Fairfax, Virginia 22031

Tel: 703/849-9535
Fax: 703/573-4005

SurfTek

Robo Surfer

Aquatic Model

CARNYTOWN.COM

Operational Systems

OPERATING CONTROLS

I. Starting the Hydraulic System

A. Verify that there are no obstructions or operating personnel in the area of the RoboSurfer.

B. Push the Green electrical Start button on the control panel on the hydraulic unit.

C. Verify that the unit is operating; a nominal pressure of 200 to 400 PSI should be observed on the system pressure gage.

II. Operating the RoboSurfer

A. After the hydraulic power unit is operating, the speed control switch, located near the RoboSurfer, can be rotated from it's null position. As the knob in rotated in a counter-clock-wise motion, the speed of the machine will increase. The control shall be done by a trained operator.

B. The RoboSurfer will stop instantly when rotated to it's null position "0", or stopped position.

III. Stopping the Hydraulic System

A. Push the Red Stop button located on the control panel on the hydraulic unit.

CARNYTOWN.COM

ELECTRIC CONTROL SYSTEM

I. The control panel is mounted on top of the portable hydraulic power unit. It consists of the following items.

A. On the cover are two switches:

1. Green button--Starts the electric motor for powering the hydraulic pump.

2. Red Button--Stops the electric motor above.

B. Inside the panel are the following components:

1. Fuses to provide protection to the control components such as the motor starter, transformer, and other control items.

2. Motor starter and overload device to protect the Motor if some unusual fault should occur, to comply with the National Electric Code (NEC).

3. Transformer to reduce the voltage from the line voltage to 24 volts for powering the DC power supply.

4. Direct Current power supply provides voltage to power the MDSD Solenoid Driver for controlling the proportional valve that determines the speed of RoboSurfer.

5. Remote Speed Control Switch

CARWYTOWN.COM

Hydraulic System Controls

I. General

A. The trouble shooting charts and maintenance hints that follow are of a general system nature but should provide an intuitive feeling for a specific system. The more general information is covered in the immediately following paragraphs.

CARNYTOWN.COM

II. Knowing the System

A. The system components are as follows:

1. Hydraulic variable displacement pump
2. Electric motor to power the pump in 1 above. It is capable of 220/440 volts, 3 phase, 60 Hertz.
3. Hydraulic Proportional Valve
4. System Pressure Gauge
5. Oil filter for the filtration of oil
6. Use hydraulic oil equal to Mobil DTE 25.

B. Operating pressure

1. During operation of the mechanism = 750 to 1400 PSI.
2. During idle time = 250 to 400 PSI; a power saving feature and self adjusting.

III. Recognizing Trouble Indications.

The ability to recognize trouble indications in a specific system is usually acquired with experience. However, a few general trouble indications can be discussed.

A. Excessive heat means trouble. A oil reservoir hotter than 150 degrees can mean a misaligned coupling or the pump relief device is starting to malfunction.

B. Excessive noise means wear, misalignment, cavitation, or air in the fluid. These noises may be the result of dirty filters or fluid, high fluid viscosity, low oil level, loose intake lines, or worn couplings.

IV. Hydraulic Fluid Changes

Good maintenance procedures make it mandatory to keep the hydraulic fluid clean. A weekly log should be kept on the fluid condition. No hard and fast rule can be established but generally accepted procedures such as maintaining clean filter elements prolong its service life. Periodic testing of the fluid by the supplier is highly recommended, at least after operating for three consecutive months.

CARNYTOWN.COM

HYDRAULIC TROUBLE SHOOTING GUIDE

The following charts are arranged in five main categories. The heading of each one is an effect which indicates a malfunction in the system. For example; if a pump is exceptionally noisy, refer to Chart I titled Excessive Noise. The noisy pump appears in Column A under the main heading. Column A there are four probable caused for a noisy pump. Follow the items as they apply to your system.

CARNYTOWN.COM

CHARTS

I. Excessive Noise

II. Excessive Heat

III. Incorrect Flow

IV. Incorrect Pressure

V. Faulty Operation

I

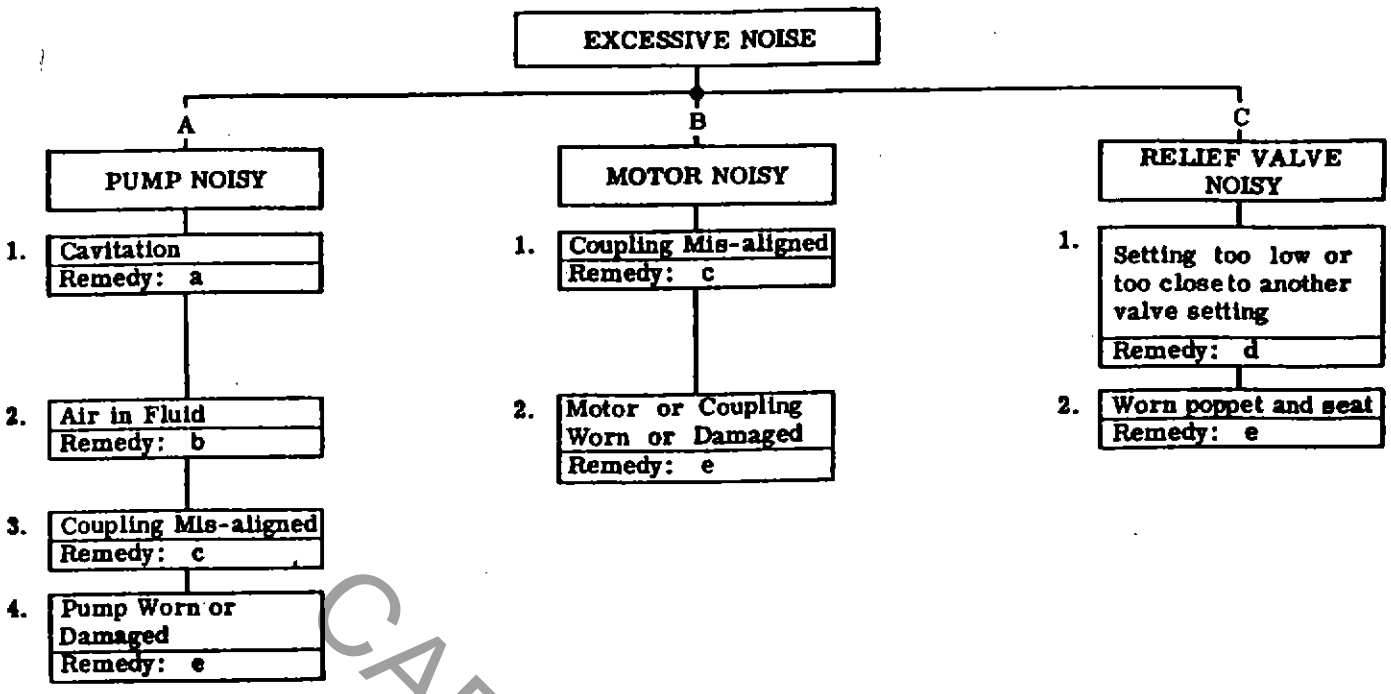

CARNYTOWN.COM

REMEDIES:

A. Any or all of the following: Replace dirty filters - wash strainers in solvent compatible with system fluid - clean clogged inlet line - clean reservoir breather vent - change system fluid - change to proper pump drive motor speed - overhaul or replace supercharge pump - fluid may be too cold.

B. Any or all of the following: Tighten leaky inlet connections - fill reservoir to proper level (with rare exception all return lines should be below fluid level in reservoir) - bleed air from system - replace pump shaft seal (and shaft if worn at seal journal).

C. Align unit and check condition of seals, bearings and coupling.

D. Install pressure gauge and adjust to correct pressure.

E. Overhaul or replace.

II

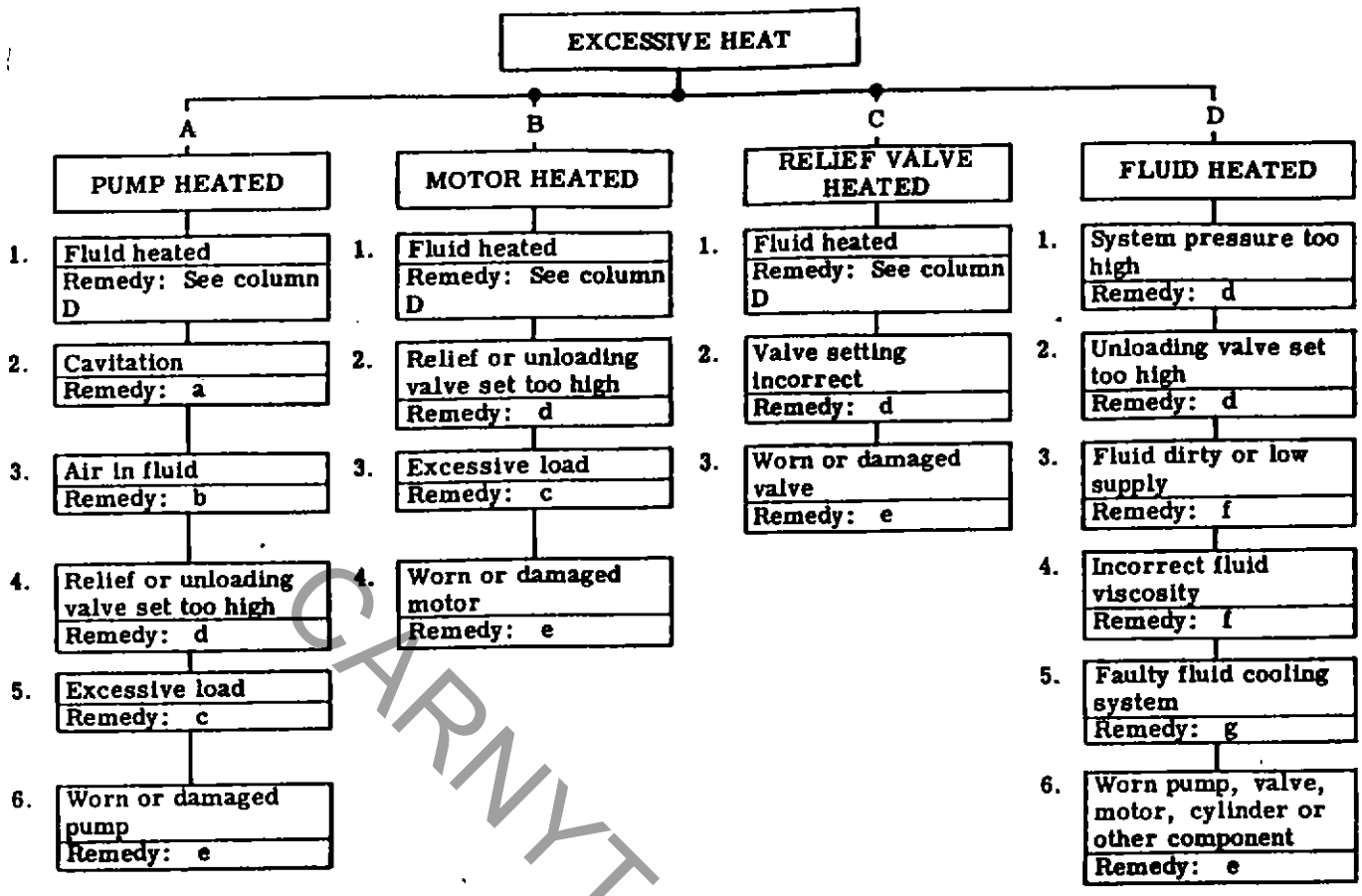

CARNYTOWN.COM

REMEDIES:

A. Any or all of the following: Replace dirty filters - clean clogged inlet line - clean reservoir breather vent - change system fluid - change to proper pump drive motor speed - overhaul or replace supercharge pump.

B. Any or all of the following: Tighten leaky inlet connections - fill reservoir to proper level (with rare exception all return lines should be below fluid level in reservoir) - bleed air from system - replace pump shaft seal (and shaft if worn at seal journal).

C. Align unit and check condition of seals and bearings - locate and correct mechanical binding - check for work load in excess of circuit design.

D. Install pressure gauge and adjust to correct pressure (Keep at least 125 PSI difference between valve settings).

E. Overhaul or replace.

F. Change filters and also system fluid if of improper viscosity - fill reservoir to proper level.

G. Clean cooler and/or cooler strainer - replace cooler control valve - repair or replace cooler.

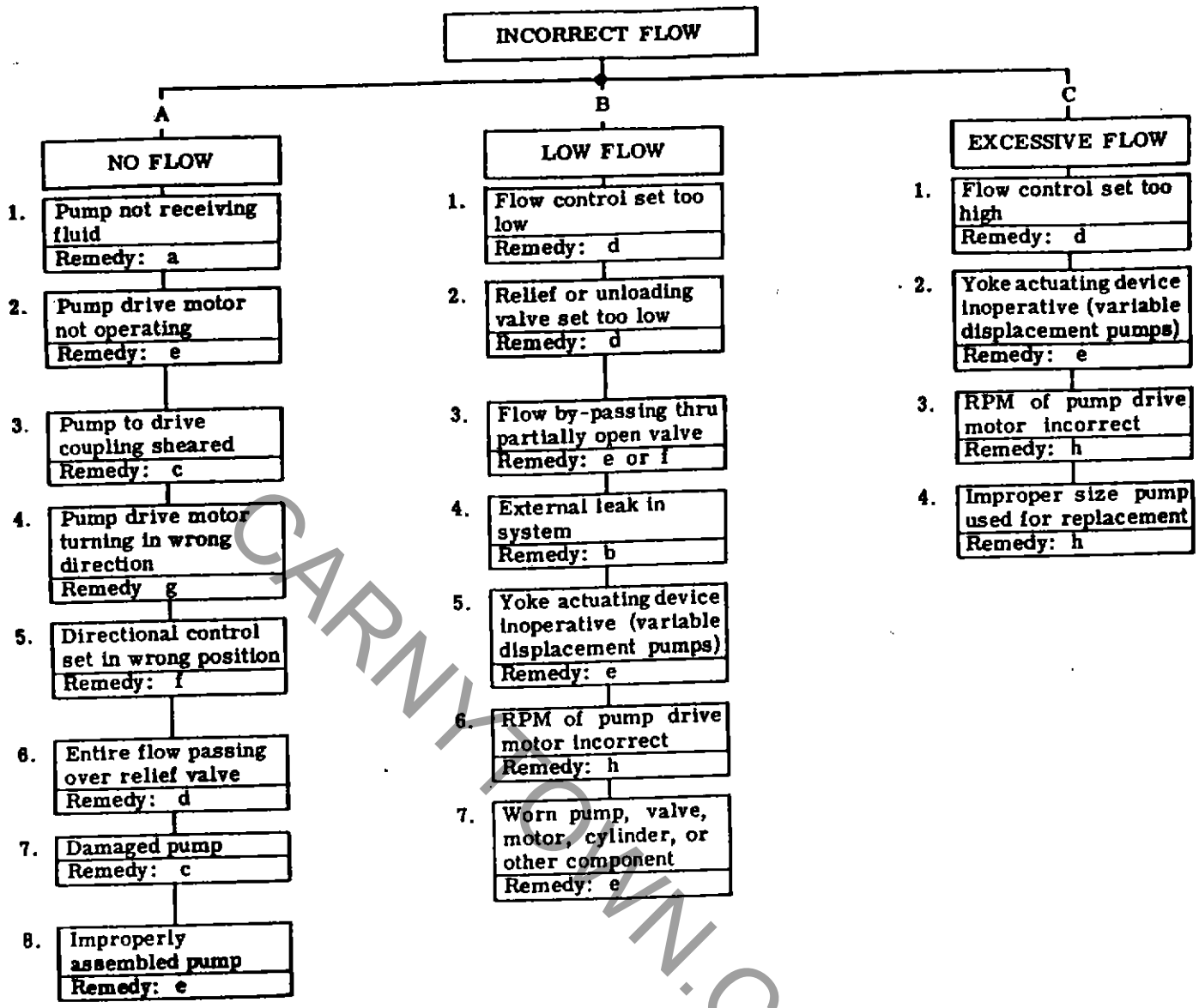

CARNYTOWN.COM

REMEDIES:

A. Any or all of the following: Replace dirty filters - clean clogged inlet line - clean reservoir breather vent - fill reservoir to proper level - overhaul or replace supercharge pump.

B. Tighten leaky connections - bleed air from system.

C. Check for damaged pump or pump drive - replace and align coupling.

D. Adjust.

E. Overhaul or replace.

F. Check position of manually operated controls - check electrical circuit on solenoid operated controls - repair or replace pilot pressure pump.

G. Reverse rotation.

H. Replace with correct unit.

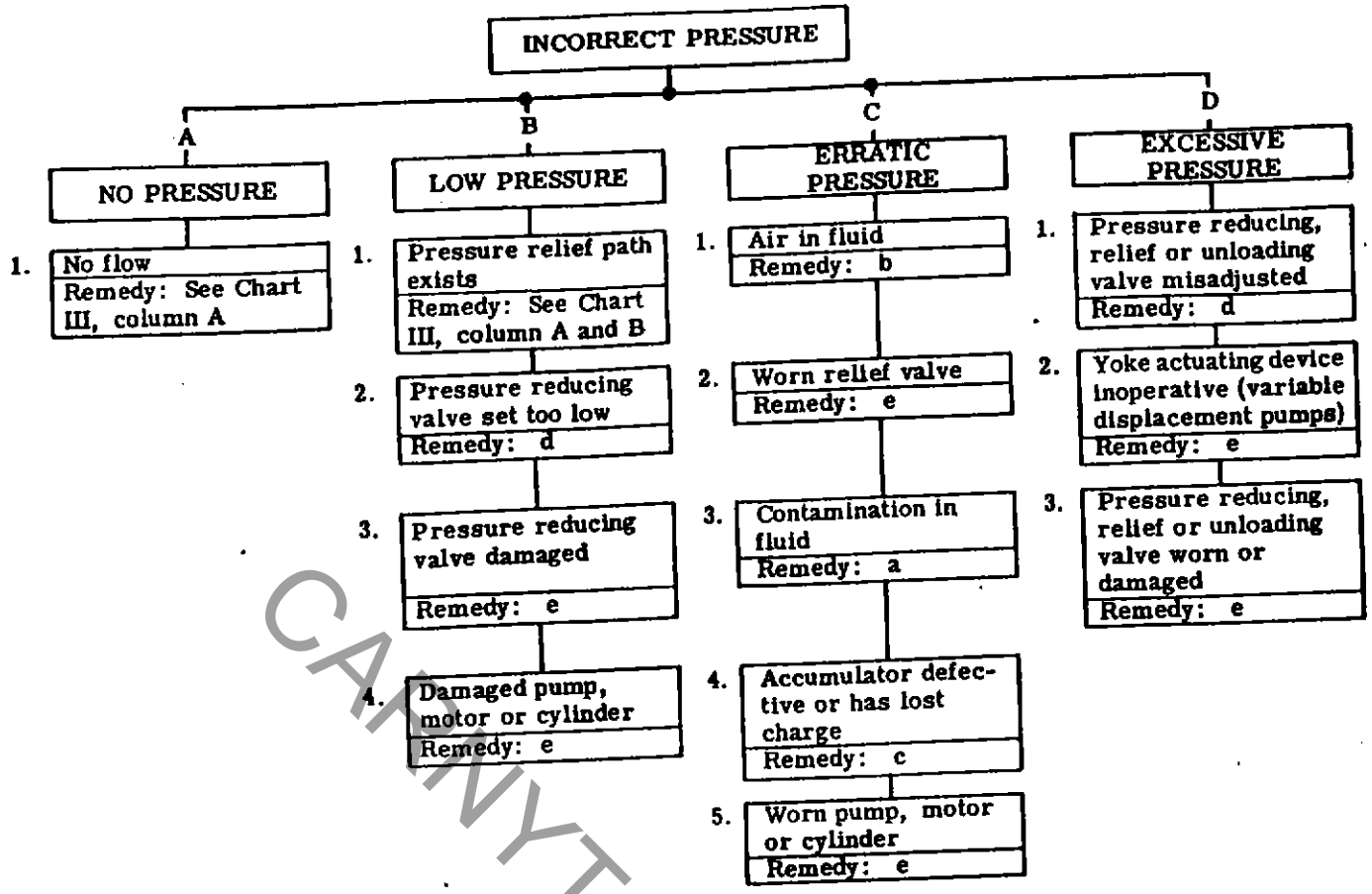

CARNYTOWN.COM

REMEDIES:

A. Replace dirty filters and system fluid.

B. Tighten leaky connections (fill reservoir to proper level and bleed air from system).

C. Check gas valve for leakage - charge to correct pressure - overhaul if defective.

D. Adjust.

E. Overhaul or replace.

V

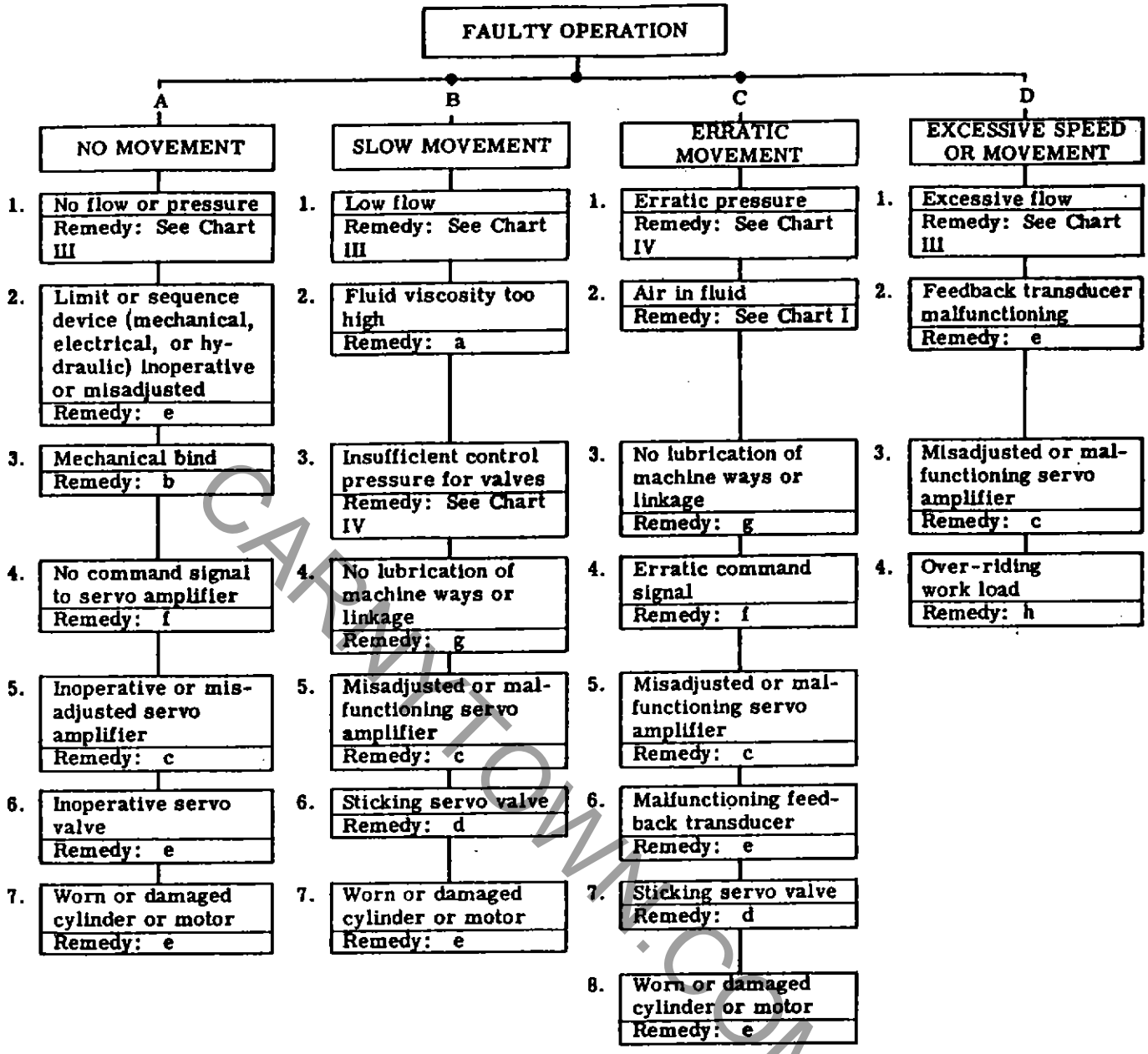

CARWTOW.COM

REMEDIES:

A. Fluid may be too cold or should be changed to clean fluid of correct viscosity.

B. Locate bind and repair.

C. Adjust, repair, or replace.

D. Clean and adjust or replace - check condition of system fluid and filters.

E. Overhaul and repair.

F. Repair command console or interconnecting wires.

G. Lubricate.

H. Adjust, repair, or replace counterbalance valve.

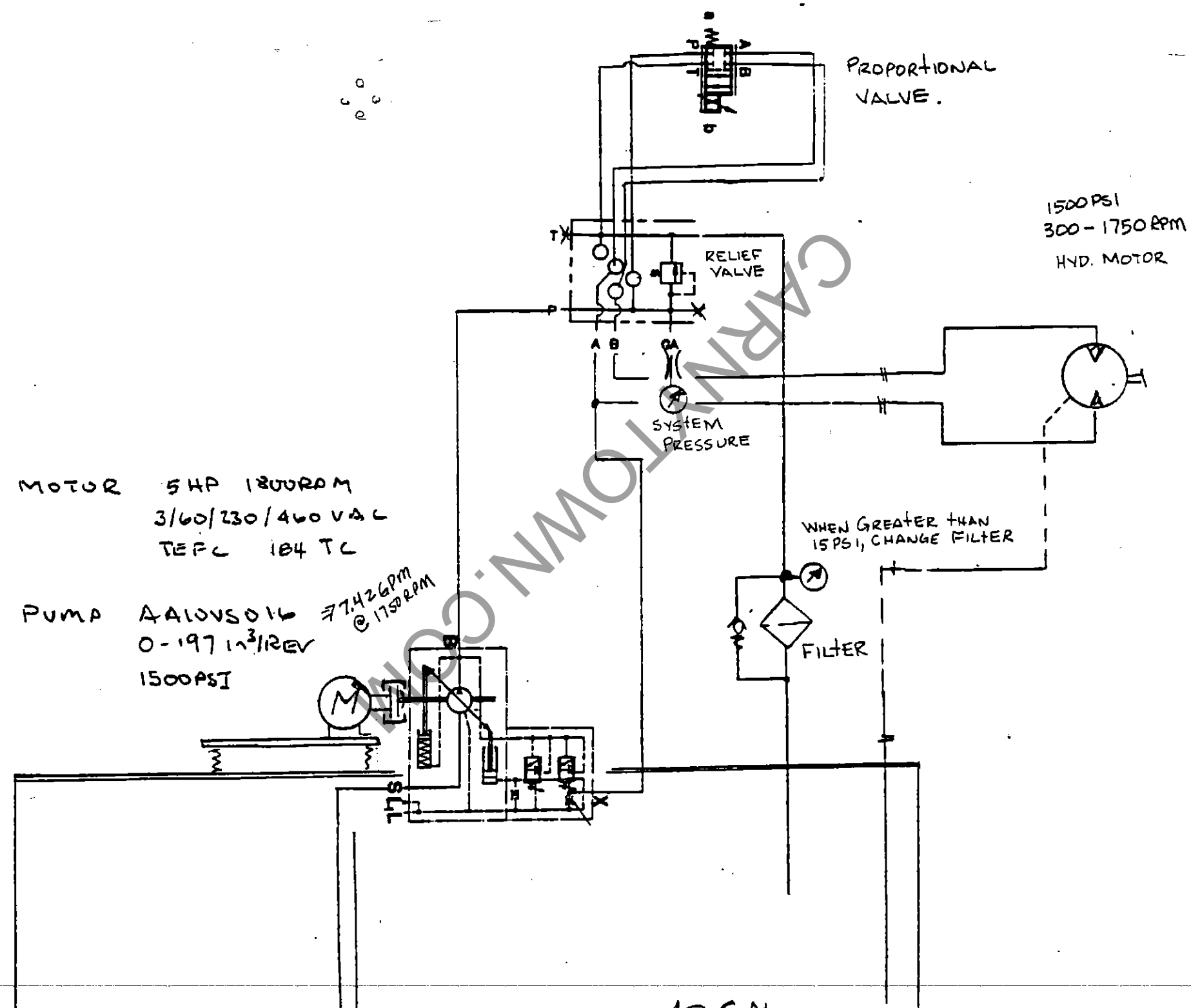

CARNYTOWN.COM

REXROTH WORLDWIDE HYDRAULICS	Hydraulic Gear Motor, External Gear Design Model M			RA 14 051/4.91
	13 Sizes	3000 PSI (210 bar)	... 3.80 in³/rev (62.3 cm³/rev)	Replaces: 9.89

- SAE 2-bolt mounting flanges standard
- Compact two piece cast aluminum construction
- Single piece shaft and driven gears for superior strength
- Anti-friction bearings for good starting torque characteristics
- High volumetric efficiencies maintained by the hydrostatically balanced wear plate sealing system
- Side or rear porting option available
- High pressure shaft seal to 225 PSIG (15.5 bar) standard
- Case drain check valve circuit available

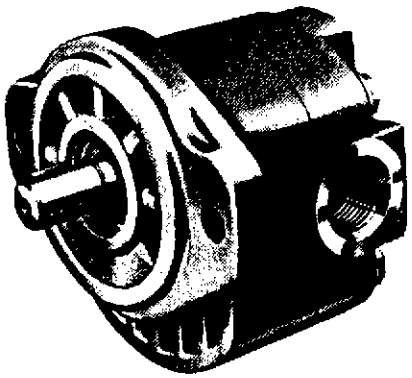

Model M15S

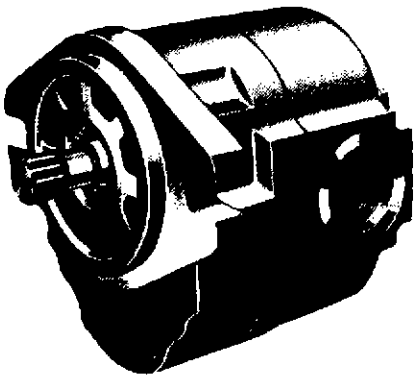

Model M30S

Symbols

(according to ISO 1219)

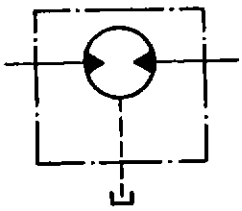

Standard motor

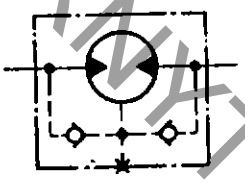

Motor with check valves

Functional Description

Hydraulic motors Model M are high speed, external gear motors used to transform hydraulic to mechanical power.

The hydrostatically loaded wear plate system ensures the volumetric efficiencies remain consistently high over the useful life of the motor. The antifriction bearing system ensures good bi-directional, starting and running torque characteristics.

The motor consists of the motor body with the integral SAE mounting flange (1), the end cover with SAE threaded ports (2), single piece drive gear (3) and single piece driven gear (4), hydrostatically balanced wear plate (5), and antifriction bearings (6).

As hydraulic fluid is pushed into the motor port, the drive gear rotates because of the differential area created between the gear teeth mesh and the gear tooth area at the gear pockets. The fluid fills the spaces between the gear teeth and is conveyed to the low pressure side of the motor.

The gear teeth maintain a self compensating seal against the motor housing. The wear plate is pressure loaded against the gear faces to create a self compensating seal against internal fluid leakage. The wear plate has precompression and decompression grooves to promote smooth motor operation.

The resistance torque at the drive shaft determines the motor's port to port pressure drop; the fluid influx determines the motor's drive speed. The MC series motor does not require a case drain connection (7) unless the downstream port pressure exceeds 225 PSI (15.5 bar).

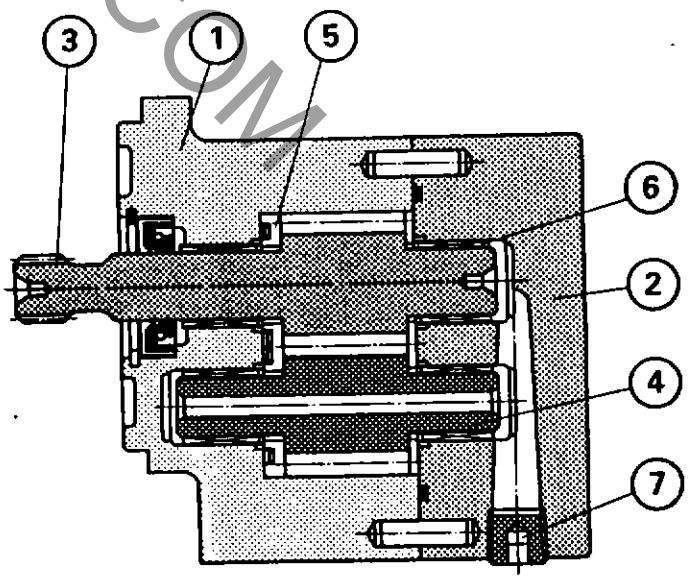

CARMYTOWN.COM

Unit Dimensions: Model M.15S...

(Dimensions in inches and millimeters)

- M15S-12 differs slightly from pictorial representation.

- M15S Series Motors must be equipped with a drain line. The maximum pressure on drain port is not to exceed 225 PSI.
- MC15S Series Motors do not require a drain line unless the motor outlet pressure is greater than 225 PSI.

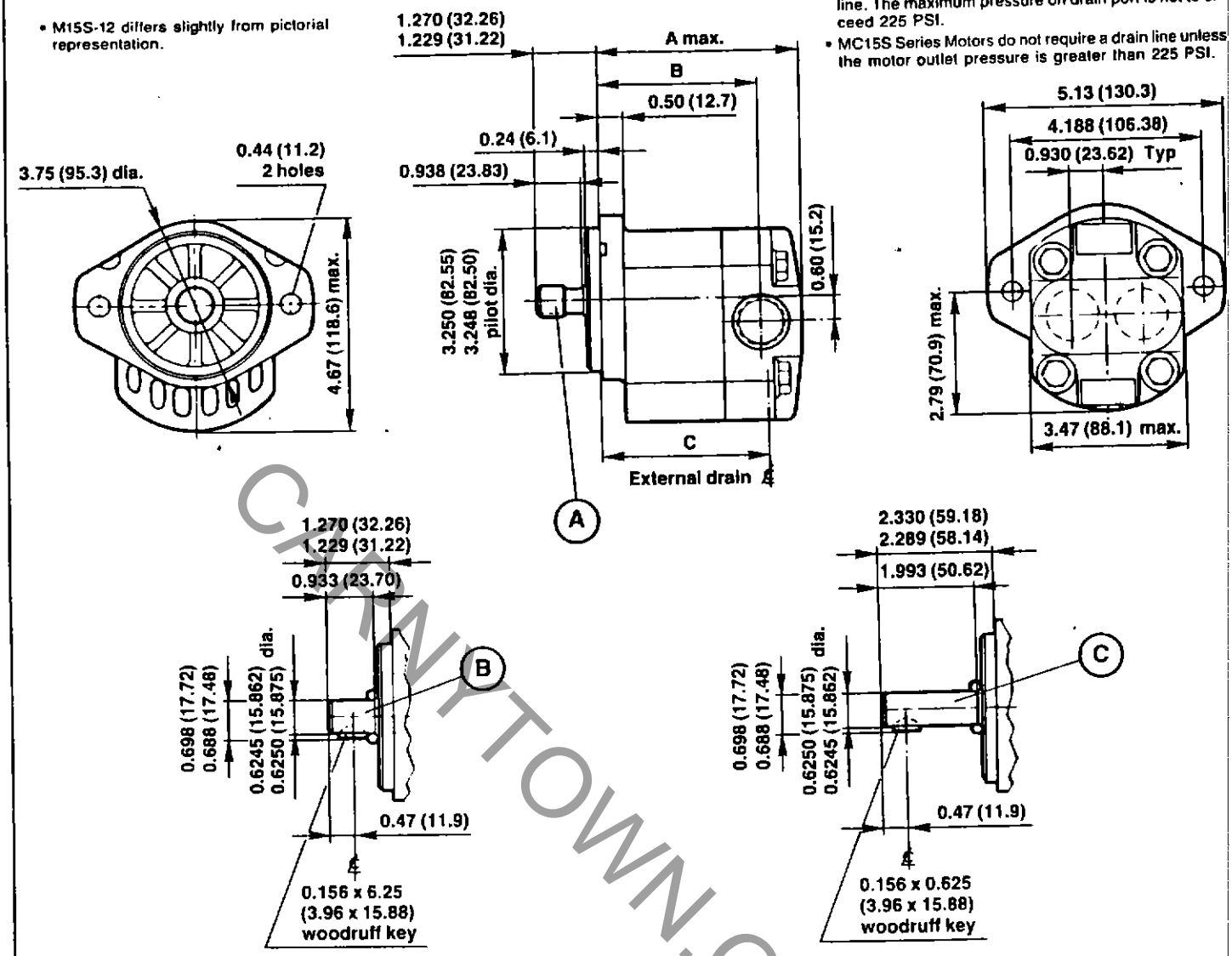

A Spline Shaft, Model "1"

Spline Data:

Spline Type:	Flat root side fit
Number of Teeth:	9
Spline Pitch:	16/32
Pressure Angle:	30°
Pitch Dia.:	0.5625" ref.
Major Dia.:	0.603-0.609"
Form Dia.:	0.5000"
Circular Tooth Thickness:	
Max. Effective:	0.0982"
Min. Actual:	0.0854"

B Keyed Shaft, Short, Model "2"

C Keyed Shaft, Long, Model "7"

CARNYTOWN.COM

Specification Data

MODEL	DISPL (CU.IN/REV)	PRESSURE RATING (PSI)	A	(A)	B	(B)	C	(C)	PORT SIZES INLET	PORT SIZES OUTLET
M..15S-4	0.43	3000	3.48	(88.4)	2.63	(66.8)	2.75	(69.9)	1.0625-12UN	1.0625-12UN
M..15S-5	0.58	3000	3.63	(92.2)	2.78	(70.6)	2.90	(73.7)	1.0625-12UN	1.0625-12UN
M..15S-6	0.68	3000	3.73	(94.7)	2.88	(73.2)	3.00	(76.2)	1.0625-12UN	1.0625-12UN
M..15S-7	0.81	3000	3.86	(98.0)	3.03	(77.0)	3.15	(80.0)	1.0625-12UN	1.0625-12UN
M..15S-9	1.00	3000	4.06	(103.1)	3.21	(81.5)	3.33	(84.6)	1.0625-12UN	1.0625-12UN
M..15S-10	1.20	2500	4.26	(108.2)	3.41	(86.6)	3.53	(89.7)	1.0625-12UN	1.0625-12UN
M..15S-12	1.45	2000	4.52	(114.8)	3.67	(93.2)	3.80	(96.5)	1.0625-12UN	1.0625-12UN

REXROTH
WORLDWIDE HYDRAULICS

Variable Axial Piston Pump, Swashplate Design Model AA10VSO (Series 30) for Open Circuit Applications

Sizes 28 to 100	...4570 PSI (...315 bar)	...6.10 in³/rev (...100 cm³/rev)

RA 06 291/06.87

- 2-bolt mounting flange to SAE standards
- SAE flanged connections with UNC threads (SAE J 518)
- Special slot-controlled swashplate design
- High power to weight ratio
- Heavy duty roller bearings for extremely long pump life
- Various control options for pressure, flow and power regulation
- Fast response times and low noise level
- Continuous operating pressure of 3625 PSI (250 bar), peak pressure to 4570 PSI (315 bar)
- Axial and radial loading of the drive shaft possible
- Good self-priming suction characteristics
- Cast iron housing, aluminium free construction
- Operation on water based fluids 95/5 (HFA emulsions) possible with de-rated performance parameters

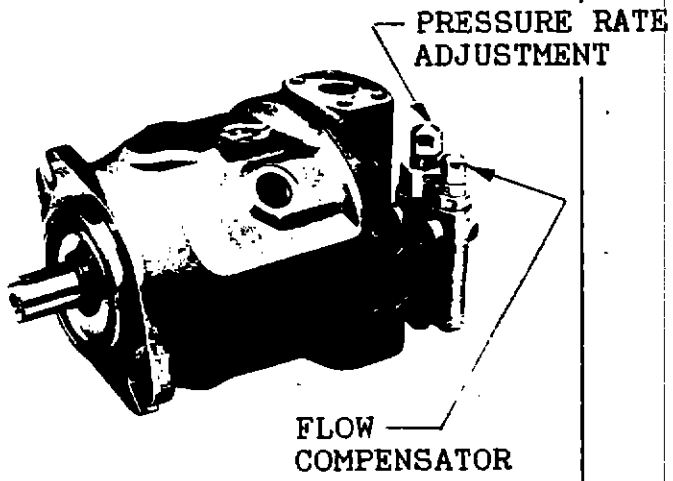

CARNKOM.COM

Functional Description

Axial piston pumps model AA10VSO are swashplate design, variable displacement pumps. They are designed for hydrostatic transmission in open circuit applications. The pump generates fluid flow and imparts to that fluid the necessary pressure forces up to 4570 PSI (250 bar).
They basically consist of the housing (1), cylinder barrel (2), piston and shoes (3), port plate (4), drive shaft (5), swash plate (6), control piston (7), mechanical stroke limiter adjustment (8), shaft seal (9) and compensator control (10).
Rotation of the drive shaft (5) causes a linear piston movement as the piston shoe (3) slides along the tilted swashplate (6).
As the piston retracts in the cylinder bore (2), fluid fills the developing vacuum cavity from the suction port »S« via the suction kidney in valve plate (13). At maximum retraction of the piston, shaft rotation causes the piston to go beyond the suction kidney and begin communication with the pressure kidney. Continuing rotation then extends the piston into the cylinder bore, forcing fluid into the pressure port »B«.
The stroke length of the piston is directly related to the swashplate angle, which swivels up to a maximum of 17 degrees for stepless flow adjustment.

Pressure and flow regulation

The swashplate is normally held at maximum swivel angle by a spring (11) as well as system pressure working on the stroking piston (12).
System pressure is also working on the pressure compensator against a setting spring. When system pressure overcomes the spring force, the spool shifts allowing system pressure into the control piston (7). This causes the pump to destroke to a regulating point sufficient to maintain compensator set pressure and lubricating fluid flow.
When the pressure setting is reached, only the amount of fluid necessary to satisfy the load conditions is delivered. If the load condition is such that no flow is required, only cooling and lubricating fluid is delivered. Power usage and heating of the fluid are thus kept to a minimum.
When system pressure falls below the compensator setting, spring force returns the spool back to its normal position, which drains control piston (7) to the pump case. The swashplate is then forced on stroke by the spring (11) and stroking piston (12). The flow control spool FR, also known as load sensing control, functions generally the same as the compensator spool. In the case of the FR spool, however, its response is due to a differential pressure across a flow control device. The spring setting only determines the differential pressure required to maintain constant output flow through a given orifice size.
Many control options including constant power control, electronic proportional flow and/or pressure control, etc. are available.

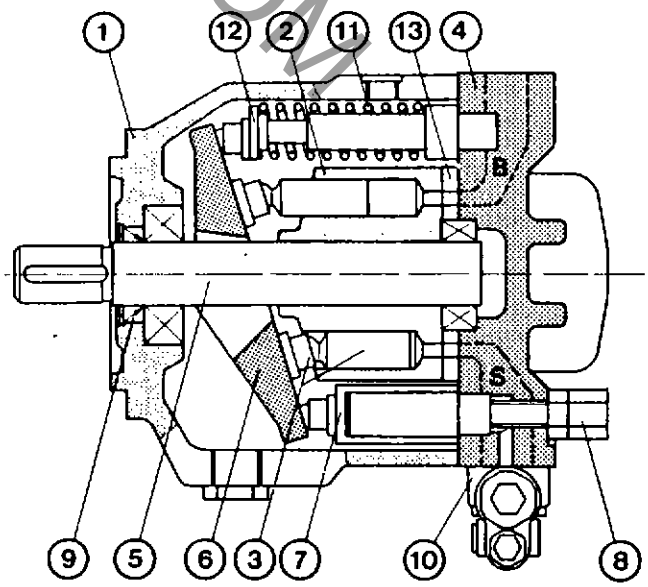

National FLUID POWER Association MEMBER

Constant pressure/flow compensator DFR

In addition to the constant pressure control, the pump flow may be regulated by means of a differential pressure (e. g. an orifice installed in the service line) »load sensing«. Adjustable mechanical flow limiter from $V_{g\,max}$ to 50 % $V_{g\,max}$ only possible on model without through drive (N00).

Static operating curve

at n_1 = 1500 rpm; t_{oil} = 122° F (50° C)

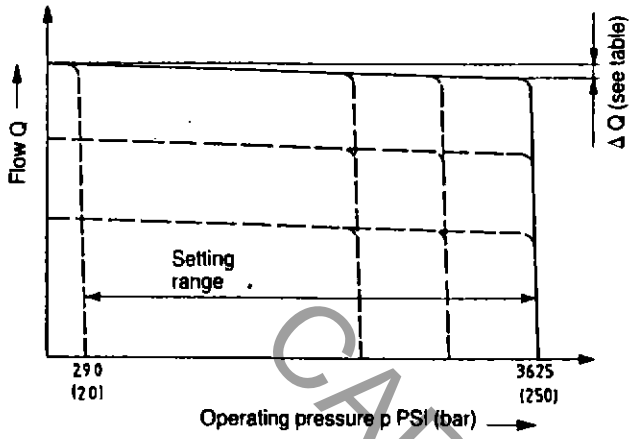

Static operating curve at variable speed

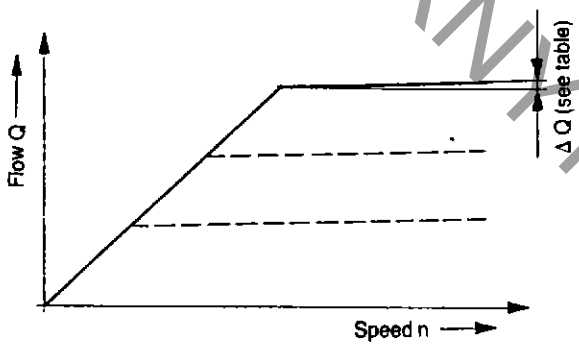

Max. flow variation

(Hysteresis and increase)
measured at drive speed n = 1500 rpm

Size		28	45	71	100
ΔQ	Gpm (l/min)	0.26 (1)	0.48 (1.8)	0.74 (2.8)	1.06 (4.0)

Dynamic operating curve

Curves are measured average values under test conditions, with unit submerged.

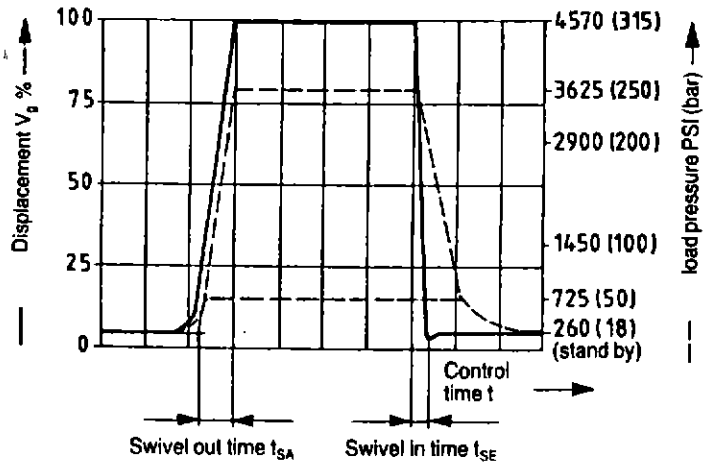

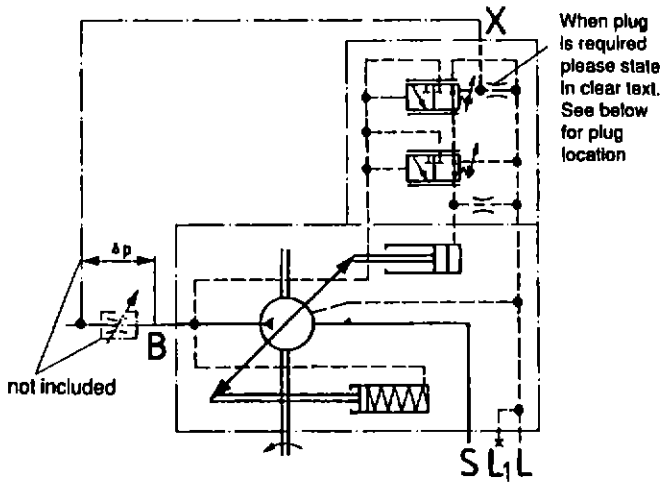

A maximum of 1.32 GPM (5 l/min) is required for pilot flow.

Differential pressure Δp:
settable between 145 and 435 PSI (10 and 30 bar)
standard setting 205 PSI (14 bar)

By unloading port X to tank, a zero stroke (deadhead) pressure of 260 PSI (18 bar) ± 30 PSI (2 bar) is achieved.

Valve options at Port »B«
(not included in pump, to be ordered separately)

Mobile valve block SP 12 (RA 64144)
Mobile valve block SP 18 (RA 64147)
Mobile valve block MP 18 (RA 64594)
Mobile valve block MP 22 (RA 64598)
Proportional valve 4WRE (RA 29060)

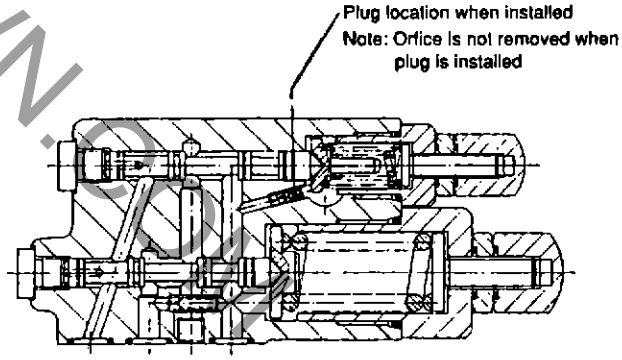

Size	t_{SA} (ms) stand by–250 bar 3625 PSI	t_{SE} (ms) 250 bar–stand by 3625 PSI	t_{SE} 50 bar–stand by 725 PSI
28	40	20	40
45	50	25	50
71	60	30	60
100	120	60	120

CARNITOWN.COM

REXROTH
WORLDWIDE HYDRAULICS

4/2 and 4/3-Way Proportional Directional Control Valve
Direct operated, Model 4 WRA (Series 1X)

Sizes 6 and 10	...4600 PSI (315 bar)	25.0 GPM (95 L/min)	RA 29 054/02.92 Replaces: 5.87

- Direct operated proportional directional control valves, which control both the direction and volume of a fluid flow
- Mounts on standard ISO 4401-3 and -5, NFPA T3.5.1M R1 and ANSI B 93.7 **D 03** and **D 05** interface
- For subplates, see RA 45052 and RA 45054
- Excellent metering capabilities due to the V shaped sharp edged notches in the control lands
- Proportional force controlled solenoids
- Matching electronic amplifiers Models VT 3013 or Vt 3014 and VT 3017 or VT 3018, see RA 29937 or RA 29939
- Electronics are "tuned" for the valve, just plug-in and run with no nulling procedures, along with integrated deadband eliminator for excellent crossover characteristics and a 1 or 5 second ramp generator (signal vs time) for smooth acceleration and deceleration control of the actuator

K 3602/4
Model 4 WRA 6...-1X/24 Z4...
with associated electronics (ordered separately)

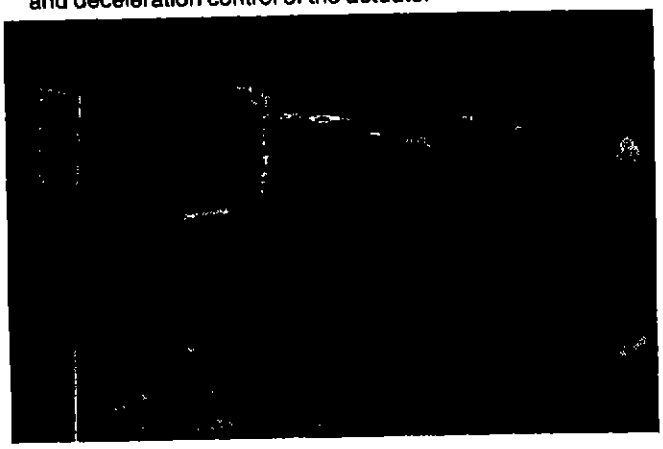

K 82/94
Model 4 WRA 10...-1X/24 Z4...
with associated electronics (ordered separately)

Functional Description

Proportional directional control valves Model 4 WRA are direct operated spool valves. They control the start, stop, direction and quantity of a fluid flow for smooth acceleration and deceleration of an actuator. The direction control is shifted to the desired position by a 0 - 9 V (or a 0 - 10 V differential) input signal to the associated electronic amplifier card.

These valves basically consist of the housing (3), control spool (4), one or two centering springs (2 & 5) and also one or two proportional solenoids (1 & 6).

Model 4 WRA...-1X/... (3-position)

In the de-energized condition, the control spool (4) is held by the return springs (2 & 5) in the center position. When the proportional solenoid (1) is supplied with an input signal from the amplifier, the solenoid pushes directly against the control spool and shifts it to the right a proportional distance to the input signal, against the opposing spring force (5). This allows fluid to progressively flow from "P" to "B" and "A" to "T". Likewise, when solenoid (6) is energized the control spool shifts to the left allowing progressive flow from "P" to "A" and "B" to "T".

Optional manual overrides are available for emergency operation of the valve (without an electronic signal).

Important: To achieve optimum operation of the valve, the air must be bled from the proportional solenoids on the inital start-up. This may be done two ways: 1) pressurize the valve, remove the two bleed screws (7 & 8) until no more air bubbles appear, then reinstall bleed screws; or 2) remove both bleed screws (7 & 8) insert standard oil can nozzle and pump fluid is one side until it flows, without air bubbles, out the other side, then reinstall screws. In both cases the tank line must be prevented from emptying if there is no inherent back pressure in the tank port of the circuit. This may be achieved by installing a check valve in the tank line. The valve's cracking pressure should be in the range of 22 ... 45 PSI (1.5 ... 3 bar).

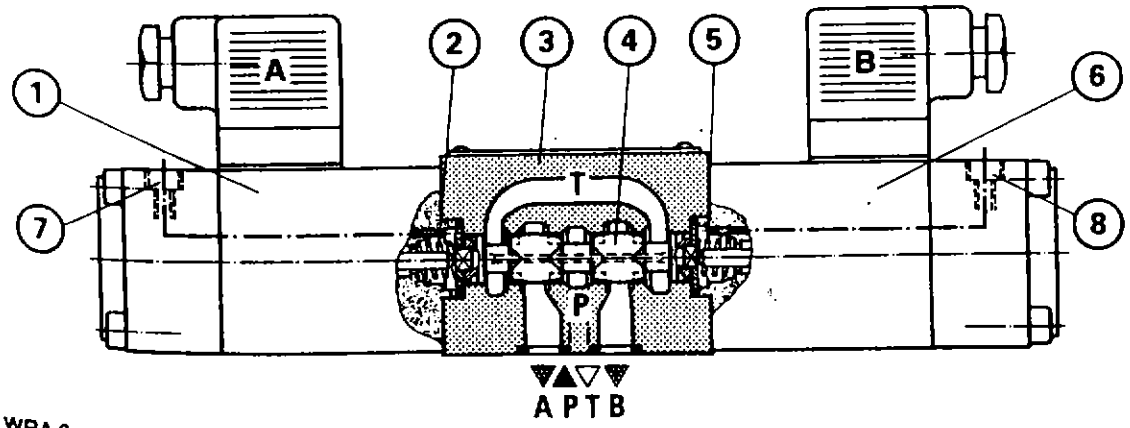

Model 4 WRA 6...-1X/24 Z4...

REXROTH
WORLDWIDE HYDRAULICS

MDSD
Mobile Dual Solenoid Driver

RA
29 778/4.92

The MDSD amplifier provides control of components that use proportional solenoids without LVDT's for actuation. The MDSD incorporates the following features:

- Wide supply voltage range: 10-28 VDC
- On board, replaceable fuse
- Reverse voltage protection
- Pulse Width Modulated (PWM) outputs
- PWM frequency adjustable from 100-275 Hz
- Max. and min. current seperately adjustable for both solenoids
- High current driver, regulated to within 1.0%, continous operation
- Infinite duration short circuit-protection on both outputs
- Reference voltage provided for control via an external potentiometer (>1K Ohm).
- Differential inputs for external voltage sources (+/- 2.5 or +/- 5.0 VDC)
- Neutral position deadband for joysticks
- Ramp time 0.1 to 10.0 sec., seperately adjustable for both solenoids (A= up/down; B= up/down)
- All adjustments are made via multi-turn potentiometers
- EMI/RFI resistant
- Rugged, environmental packaging
- Temperature range: -25°to 80°C

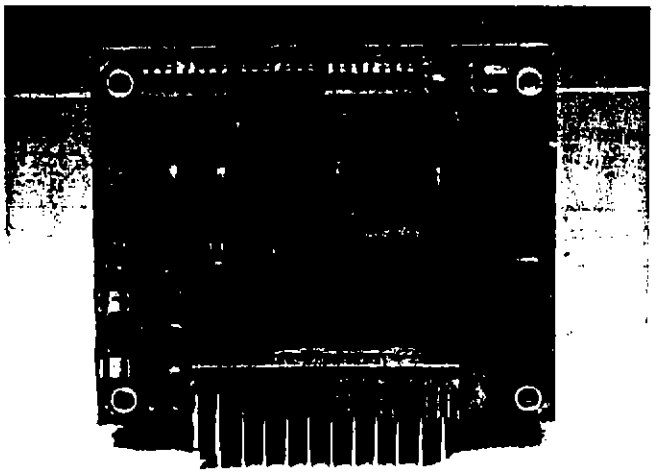

MDSD Mobile Dual Solenoid Driver

Functional Description:

The MDSD is a high current amplifier that controls proportional valves with one or two force solenoids. Applications include the EL and EP controls on A2, A4, A7, A11 pumps and A6 motors. Also included are pressure and directional valves FT-DRE2K, DRE4K, DBE, DBET, MP, SM, SP, 4WRA, 4WRZ. All 12 Volt solenoids can be controlled over the entire 10 to 28 VDC power supply range to simplify design. Of course, 24 Volt solenoids can be used in 24 Volt power systems.The rugged, compact design is environmentally protected by a potting compound (Concap: EN-21 Conathane). The MDSD has good insusceptibility to electromagnetic interference (EMI) and has a wide temperature range.

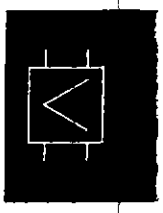

Ordering Code:

MDSD — 1X / 0 *

Mobile Dual Solenoid Driver

Electrical deadband

- +/- 10 % deadband (joystick and open loop applications) = **no desig. (std)**
- 0 % deadband (for special applications) = **1**

Design Series 10...19

Further details to be written in clear text

Preset Adjustments

	P1,P2	P5, P6	P3,P4	P7
0 =	X	X	X	X
1 =	2 sec	700 mA	1800 mA	180 Hz
2 =	2 sec	400 mA	1200 mA	100 Hz
3 =	2 sec	300 mA	800 mA	180 Hz
4 =	2 sec	200 mA	600 mA	100 Hz

X = don't care

CARNYTOWN.COM

Technical Data

Power supply voltage: V_{DC} = 10 to 28 VDC

Power requirement: $P = I^2_{max} \cdot R_{SOL} \cdot 1.2$ W

(Refer to valve or pump data sheet for max. solenoid current and hot solenoid resistance)

Power supply current: $I = \frac{P}{V_{DC}}$ (Amp)

Ramp time: 0.2 to 10 sec.

Control potentiometer: 1KΩ to 10KΩ

Pulse frequency (P7): 100 to 275 Hz

Fuse - 5x20 mm fast acting: 4 Amp

EMI/RFI: 0 to 50 MHz at 30 V/m
0 to 650 Mhz at 20 V/m (with all wiring shielded)

Ambient temperature: - 25°to 80°C

Weight: 0.36 lbs

Terminal Block Connections

Potentiometer/joystick control:

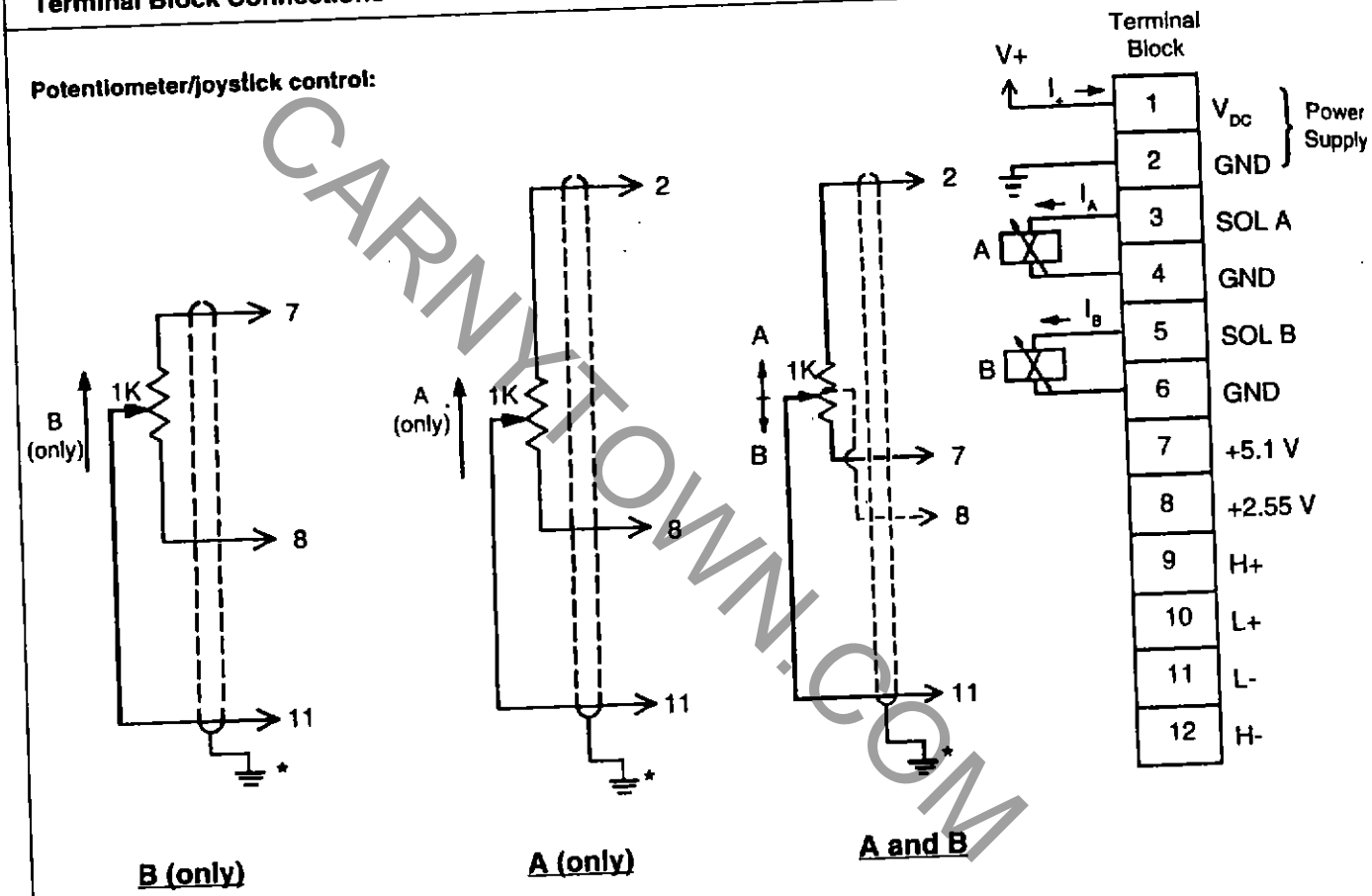

B (only) **A (only)** **A and B**

* Ground shield at card end only.

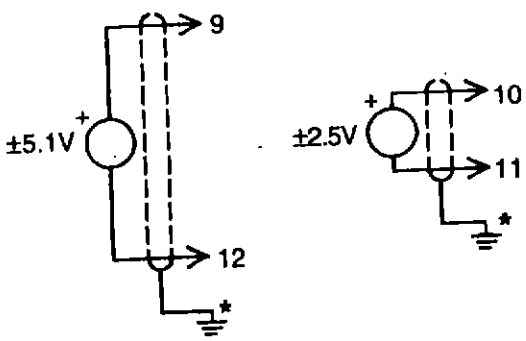

External Voltage Commands:
± 2.5V use terminals 10 and 11, $V_{10} > V_{11}$ for Sol A
± 5.0V use terminals 9 and 12, $V_9 > V_{12}$ for Sol A

CARNYTOWN.COM

Unit Dimensions

(Dimensions in inches and millimeters)

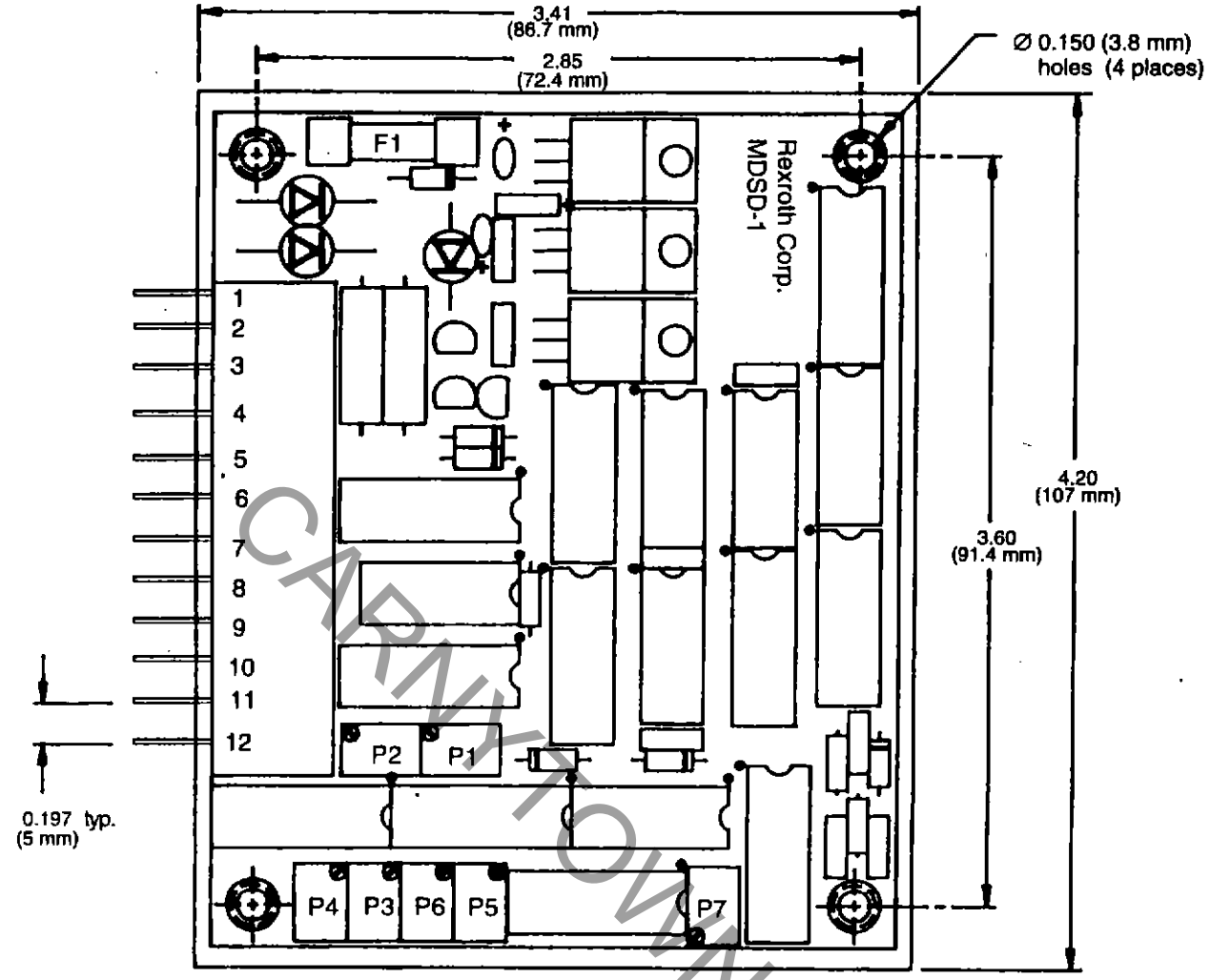

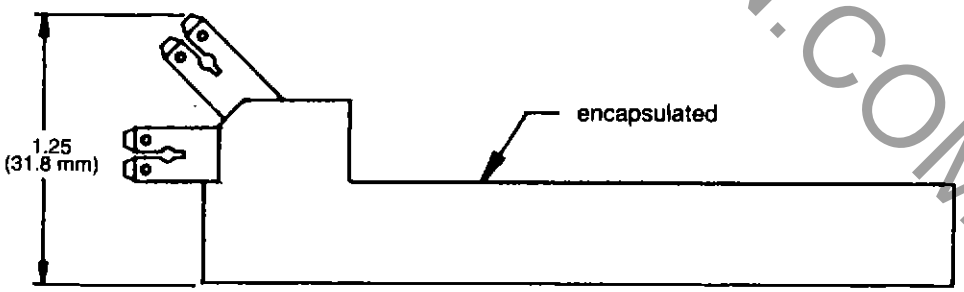

Typical terminal types

Tab per DIN 46249.
Mates with 0.25 in. & 0.11 in.
Female tab connectors

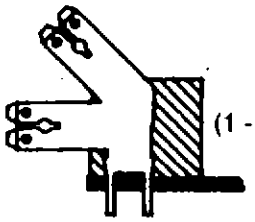

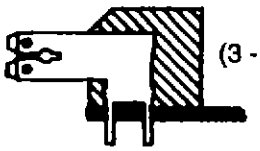

CARNYTOWN.COM

SEAL AND BEARING DATA

D90 TYPE SE BEARING AND OIL SEAL CHART

SIZE/ REDUCTION	PART NUMBER REFERENCE	HIGH SPEED SEALS		SLOW SPEED SEALS			HS BEARING		INTERMEDIATE BEARINGS		SLOW SPEED BEARINGS (CUP/CONE)		
		SOLID[1] INPUT	HOLLOW MOTORIZED INPUT	SOLID OUTPUT	HOLLOW OUTPUT	"L" SERIES (DROP-BEARING)	FRONT[3]	REAR	FRONT[2]	REAR	SOLID OUTPUT	HOLLOW OUTPUT	"L"[3] SERIES (EXTENSION END)
913 Single	WS Part No.	30057-G	4959-G	30040-G	N/A	N/A	20118-G	20118-G	N/A	N/A	2463/2462-G	N/A	N/A
913 Single	Mfg. Part No.	CR 6660	CR 11124	CR 7443	N/A	N/A	6203	6203	N/A	N/A	LM11910/LM11949	N/A	N/A
917 Single	WS Part No.	30118-G	30060-G	30088-G	30406-G	N/A	2959-G	2959-G	N/A	N/A	5887/5838-G	20482/20483-G	N/A
917 Single	Mfg. Part No.	JM 10335LPD	CR 13534	CR 9935	CR 14705	N/A	6205	6205	N/A	N/A	L44610/L44643	JL69310/JL69349	N/A
917 Double	WS Part No.	30057-G	4959-G	30088-G	30406-G	N/A	20118-G	20118-G	2959-G	2959-G	5887/5838-G	20482/20483-G	N/A
917 Double	Mfg. Part No.	CR 6660	CR 11124	CR9935	CR 14705	N/A	6203	6203	6205	6205	L44610/L44643	JL69310/JL69349	N/A
920 Single	WS Part No.	30118-G	30060-G	30088-G	30127-G	N/A	2959-G	20194-G	N/A	N/A	5887/5838-G	20075/20204-G	N/A
920 Single	Mfg. Part No.	JM 10335LPD	CR 13534	CR 9935	CR 19762	N/A	6205	6304	N/A	N/A	L44610/L44643	JLM104910/LM104949	N/A
920 Double	WS Part No.	30057-G	4959-G	30088-G	30127-G	N/A	20118-G	20118-G	2959-G	20194-G	5887/5838-G	20075/20204-G	N/A
920 Double	Mfg. Part No.	CR 6660	CR 11124	CR 9935	CR 19762	N/A	6203	6203	6205	6304	L44610/L44643	JLM104910/LM104949	N/A
924 Single	WS Part No.	30120-G	30047-G	30025-G	3313-G	N/A	20140-G	20140-G	N/A	N/A	20062/20061-G	5686/5685-G	N/A
924 Single	Mfg. Part No.	CR 13918	CR 17285	CR 12458	CR 22354	N/A	6207	6207	N/A	N/A	LM67010/LM67048	382A/397	N/A
924 Double	WS Part No.	30118-G	30060-G	30025-G	3313-G	N/A	2959-G	2959-G	20140-G	20140-G	20062/20061-G	5696/5695-G	N/A
924 Double	Mfg. Part No.	JM 10335LPD	CR 13534	CR 12458	CR 22354	N/A	6205	6205	6207	6207	LM67010/LM67048	382A/387	N/A
926 Single	WS Part No.	30120-G	30047-G	30025-G	30044-G	30025-G	20140-G	20140-G	N/A	N/A	20062/20061-G	3628/20350-G	4650/776
926 Single	Mfg. Part No.	CR 13918	CR 17285	CR 12458	CR 24898	CR 12458	6207	6207	N/A	N/A	LM67010/LM67048	394A/390A	15245/15123
926 Double	WS Part No.	30118-G	30060-G	30025-G	30044-G	30025-G	2959-G	2959-G	20140-G	20140-G	20062/20061-G	3628/20350-G	4650/776
926 Double	Mfg. Part No.	JM 10335LPD	CR 13534	CR 12458	CR 24898	CR 12458	6205	6205	6207	6207	LM67010/LM67048	394A/390A	15245/15123
930 Single	WS Part No.	30464-G	30047-G	30078-G	30033-G	30032-G	20318-G	2958-G	N/A	N/A	20144/20143-G	3628/20577-G	2888/2889-G
930 Single	Mfg. Part No.	CR 13986	CR 17285	CR 13569	CR 26186	CR 14247	6208	6307	N/A	N/A	LM48510/LM48548	394A/399AS	2720/2788
930 Double	WS Part No.	30118-G	30060-G	30078-G	30033-G	30032-G	2959-G	20194-G	20318-G	2958-G	20144/20143-G	3628/20577-G	2888/2889-G
930 Double	Mfg. Part No.	JM 10335LPD	CR 13534	CR 13569	CR 26186	CR 14247	6205	6304	6208	6307	LM48510/LM48584	394A/399AS	2720/2788
935 Single	WS Part No.	30025-G	30047-G	30047-G	5649-G	5422-G	20212/20211-G		N/A	NA	20219/20413-G	5648/5647-G	20219/20143-G
935 Single	Mfg. Part No.	CR 12458	CR 17285	CR 17285	CR 28746	CR 16085	M88010/M88048		N/A	N/A	25520/25580	29620/29685	25520/25580
935 Double	WS Part No.	30018-G	30060-G	30047-G	5649-G	5422-G	2959-G	20194-G	20212/20211-G		20219/20413-G	5648/5647-G	20219/20143-G
935 Double	Mfg. Part No.	JM 10335LPD	CR 13534	CR 17285	CR 28746	CR 16085	6205	6304	M88010/M88048		25520/25580	29620/29685	25520/25580

1. Including coupling style motorized
2. Not used on hollow input models
3. For non extension end slow speed bearings see solid output column

CR = Chicago Rawhide
JM = Johns Manville

CARDOWN.COM

LUBRICANTS
WORM GEAR REDUCERS

For special applications that involve severe ambient temperature extremes or a seasonal oil requirement, use Mobil SHC 629.

Ambient Temperature	– 30 to 15°F	16 to 50°F	51 to 110°F	111 to 165°F
Max. Operating Temp.	150°F	185°F	200°F	200°F
Viscosity @ 100°F, SUS		1919 to 2346	2837 to 3467	4171 to 5098
ISO Viscosity Grade	320	460	680	1000
Compounded with:	3% to 10% fatty or synthetic fatty oils or mild EP additives			
AGMA Lubricant No.		#7 Comp.	#8 Comp.	#8A Comp.
Cities Service Co.	CITGO EP Comp. 68	CITGO Cyl. Oil 400-S	CITGO Cyl. Oil 680-7	CITGO Cyl. Oil 680-7
Fiske Bros. Refining	SPO-233	SPO-277	SPO-288	SPO-288
Gulf Oil Corp.	SL-460 E.P.	Transgear EP 460	Transgear EP 680	Transgear EP 800
Keystone Div.	KSL-365	KSL-366	K-600	K-620
Mobil Oil Corp.	SHC 629	Mobil 600W	Mobil 600W Super	Mobil Extra Hecla
Shell Oil Corp.	Omala 68	Omala 460	Omala 680	Omala 800
Sun Oil Corp.	Sunep 1050	Sunep 1110	Sunep 1150	Sunoco Gear Oil 8 AC
Texaco, Inc.	Meropa 68	Vanguard Cyl. Oil 460	Honor Cyl. Oil 680	650T Cyl. Oil 1000
American Lub., Inc.	SHC 9065	Ind. Gear Oil 140	AGMA #8 Gear Oil	AGMA #8 Gear Oil
Chevron	NL Gear Comp. 100	NL Gear Comp. 460	NL Gear Comp. 680	NL Gear Comp. 1500