1/22/97
MR

MFG: S & S ORIGINAL
AMUSEMENT RIDES
NAME: FROG HOPPER
TYPE: Kiddie

Frog Hopper™
Rodeo Rider™

Operating Procedures Training Manual

Document No. 970069-rev

Models:
Frog Hopper™ Stationary
Rodeo Rider™ Stationary

CARNYTOWN.COM

Revision Date: October 16, 1997

S&S Original Amusements Inc.
Logan, UT 84341 USA
Phone: (435) 752-1939
Fax: (435) 752-1948

Newer revisions of this manual supersede all previous editions.

Frog Hopper™/Rodeo Rider™

Operating Procedures Training Manual
TABLE OF CONTENTS

Section One: Introduction

Section Two: Ride Operation Policy and Safety
1. Safety Commitment
2. Ride Operation Policies

Section Three: Operations Manual
1. Ride Components
2. Ride Description
3. General Description
   (a) Ride/Attraction Summary
   (b) Ride/Attraction Specifications

Section Four: Personnel and Duties
1. Control Operator Responsibilities
2. Control Operator Position
3. Control Operator Spiels

Section Five: A. Operating Procedures
1. Pre-Opening Cleaning
2. Pre-Opening Safety Checklist
3. Scheduled Closing of the Ride

B. Planned/Unplanned Downtime and Unloading Procedures
1. Emergency Unloading Procedures

Section Six: Safety
1. Lock-Out Procedures
2. Emergency Procedures/Guidelines
3. Guests with Disabilities

Section Seven: Important Office Locations and Phone Numbers

Section Eight: Your Notes

CARNKROWN.COM

SECTION ONE: Introduction

This manual for reference only. It is not intended to cover all possible situations or technical specifications of the ride. Use the manual as a guide to support your training and as a future reference.

Please feel free to contact S&S Original Amusements, Inc. (The Factory) regarding any questions or suggestions about the safety, maintenance, operations, or any of the manuals associated with the Frog Hopper™/Rodeo Rider™ ride. (See cover page for address and phone/fax numbers.)

Remember—our highest priorities are to:

- ensure guest safety;
- increase employee safety awareness;
- reduce the risk of employee or guest injury/accidents;
- reduce operating down time;
- improve communication between managers, supervisors, and staff;
- provide operation and quality control;
- provide guest satisfaction, comfort, and security.

Safety must be the highest priority in an industry that provides fun and entertainment to nearly 300 million guests each year.

CARNYTOWN.COM

SECTION TWO: Ride Operation Policy and Safety

1. SAFETY COMMITMENT

Every team member is responsible and accountable for the safety of themselves, their fellow workers, and for each guest that enters the facility.

Safety depends on sincere, constant, and cooperative efforts of the entire organization. Whatever your position, please take the matter of accident prevention and safety seriously.

Safety isn't a constant, thus it must be your #1 concern. Basic guidelines must be generated in order to create and maintain a safe environment.

The following are basic rules to adhere to order to maintain a safe environment.

1. Maker sure all guest areas are clean.
2. Working areas should be neat, clean, and free from actual and potential hazards.
3. All equipment, tools, and machines should be in good repair and safe to use.
4. Study safe work and operation methods. Teach and log ride employees performance in the same precise methods.
5. Correct immediately hazardous situations possibly leading to accidents.
6. Comply with all laws regarding accident prevention and safe working conditions.

How to recognize an unsafe situation:

1. If a situation has the potential to become a trip on it, slip on it, knock their head on it, get a splinter from it, or get cut by it hazard, it's probably unsafe and needs to be remedied quickly.

Many accidents are caused by unsafe actions which should be reported by all employees immediately.

Housekeeping is very important to safety. Ensure that everything is in its proper place with no trash or other debris laying around.

- ***Your attitude matters!*** Safety and attitude are two very important words in every walk of life. As well they are **critical** words in the amusements industry.

CARNYTOWN.COM

SECTION TWO: Ride Operation Policy and Safety

1. SAFETY COMMITMENT (cont.)

The public comes to your facility to ride the rides, see the shows, and be entertained—their primary concern is to have fun. As an operator of rides and attractions, you are in control of the machines and environment the public has come to enjoy. They look to you to maintain a watchful and safe attitude. Your responsibilities and attitudes may well matter the most in whether a guest has a comfortable and enjoyable time.

MANAGEMENT STATEMENT OF POLICY

The safety and well being of all Frog Hopper™/Rodeo Rider™ employees and guests should always be the top priority of management. In support of this commitment, management should make every effort to provide a safe environment by making certain of the following:

1. Employees should be provided with all safeguards to assure safe working conditions.
2. Guests should be provided with a neat, clean, and safe facility.
3. Employees should be provided with clean and safe working conditions, free from actual and/or potential hazards.
4. Every effort should be made to maintain equipment, tools, and machines in good repair.
5. Safe working procedures should be developed and employees should be trained in these procedures.
6. All reported hazardous situations should be corrected immediately.
7. The facility should be in compliance with all federal, state, and local laws regarding accident prevention.

Besides this commitment, the success of the facility's safety and health program depends again on sincere, constant, and cooperative efforts from the entire organization. Therefore, every employee is required to take seriously the matter of accident prevention and safety, and to work in support of our safety programs.

The basic objective is to establish, throughout the entire facility, the firm and fully accepted concept that our guests, employees, and property are our most important assets. Thus, conservation thereof should receive top priority, support and participation.

CARNYTOWN.COM

SECTION TWO: Ride Operation Policy and Safety

2. RIDE OPERATION POLICIES

1. The Frog Hopper™/Rodeo Rider™ is recommended for guests only in good health and physical condition.
2. Guests should be instructed to ride facing forward in their seats.
3. A ride cannot be operated after operating hours without prior approval of a member of operations management. A supervisor must be present while the ride is being operated. *All operating policies apply at all times*, whether open to the public or not.
4. A host/hostess cannot operate a ride until the authorized maintenance mechanic has approved it and the appropriate forms are signed off.
5. Personal radios, cassette decks, CD players, etc. are not permitted on the ride at any time.
6. Off-duty employees are allowed only in the guest areas of the facility during operating hours.
7. Equipment on the ride should be used only for its intended purpose.
8. Any designated uniforms must be worn properly at all times.
9. All operations personnel must remain at their position once signed in. All breaks should be taken in designated break areas. Anyone needing to leave during his/her scheduled work hours must obtain approval from the person in charge of the ride.
10. Respond courteously and attentively to all guest inquiries.
11. All phones at the ride are to be used for business purposes only. Be sure to answer the phone promptly. When answering a facility phone, you are to first give the name of the ride and then your name; *i.e.* "Rodeo Rider™, This is Mike."
12. Guest misbehavior
    (a) Should a guest violate a ride safety rule and then refuse to comply once advised of the rule, s/he may be ejected from the facility at the discretion of security.
    (b) Contact security for assistance and the operations office to notify your supervisor.
    (c) Should a guest interfere with safety, discontinue the operation until the problem has been resolved.

CARNYTOWN.COM

SECTION TWO: Ride Operation Policy and Safety

2. RIDE OPERATION POLICIES (cont.)

13. If a ride is taken out of operation due to a guest violating proper participation procedures, the following guidelines should be observed regarding any inconvenienced guests at the ride.
    (a) The inconvenienced guests should be informed that the ride was temporarily stopped to another guest's unsafe behavior, though the guests should not be informed of the offending individual.
    (b) An announcement over the unit's PA system should be made indicating that the unit is not operational. *No reference over the PA system should be made to any form of guest's misbehavior.*
14. Use the following guidelines for being a safe operator:
    (a) Never leave your ride unattended, even if no one is riding.
    (b) Do not attempt to service your ride, contact maintenance.
    (c) Do not operate your ride unless the maintenance department has inspected and okayed it for operation.
    (d) Never load more than 1 person on one seat. **No** doubling up with small children.
    (e) Do not allow intoxicated guests to ride. If a problem occurs, contact your lead foreman.
    (f) If a guest requires assistance, offer the guest help. **Do not** lift or carry the guest.
    (g) Make sure guests are properly and securely seated before dispatching.
    (h) Observe the guests at all times while boarding the ride, during the ride cycle, and while exiting the ride.
    (i) Always enforce all restrictions fairly but firmly.

CARNYTOWN.COM

SECTION THREE: Operations Manual

1. RIDE COMPONENTS

The Frog Hopper™/Rodeo Rider™ consists of the following.

A. The passenger seat which includes a restraint system.

B. The cart, wheels, and all other cart components.

C. The cable system which includes sheave assemblies, cart cables, and all related items.

D. The power system which includes the electric motor, pump, valves, plumbing system, and all related components.

E. The electrical system.

F. The boom structure which rises vertically above the base pad supporting the cart.

G. The base structure, a rectangular structural steel cage which envelops the drive system and supports the boom structures.

H. The loading area, fences, and gates as required by the owner.

I. The lighting system which should be provided by the owner.

CARNYTOWN.COM

SECTION THREE: Operations Manual

3. GENERAL DESCRIPTION

(a) Ride/Attraction Summary

Cycling capacity of rides per hour:

5 Seat ride: 120-180 passengers per hour

Labor Summary:

Minimum: 1 host/hostess

Operating Statistics:

Trip time: 1½ minutes
Cycle time: 2-3 minutes

Restrictions:

Height: None
Medical: Expectant mothers, and persons with neck or back problems, vertigo, or heart conditions are not permitted to ride.
No infants

Control Component Definitions:

Operator's pendant: Control pendant used by the control operator to operate the ride.

CARNYTOWN.COM

SECTION THREE: Operations Manual

2. GENERAL DESCRIPTION (cont.)

(b) Ride/Attraction Specifications

ASTM F 698-88 SPECIFICATION SHEET: 6 Seat Ride

RIDE ATTRACTION NAME: Frog Hopper™
MANUFACTURER: S&S Original Amusements Inc.
MANUFACTURE DATE: See ID tag located on base unit
MODEL NUMBER: Frog Hopper™ Stationary
SERIAL NUMBER: See ID tag located on base unit
RIDE SPEED: 3 mph **DIRECTION OF TRAVEL:** Vertical
PASSENGER WEIGHT: Minimum: 0 lbs Maximum: 400 lbs
PASSENGER CAPACITY: 6
RIDE DURATION: 90 seconds **BALANCING:** Within 100 lbs.
ENVIRONMENTAL RESTRICTIONS: Do not operate in high winds or electrical storms.
PASSENGER RESTRICTIONS: Passengers must fit properly in restraint systems.
ELECTRICAL POWER RESTRICTIONS: 220V, 1 phase, 50 amp, 50Hz/60Hz
MECHANICAL POWER REQUIREMENTS: N/A
WATER FLOW: N/A

STATIC	**HEIGHT:** 25'	**WIDTH:** 8'-6'	**DIAMETER:** N/A
	DEPTH: 8'	**WEIGHT:** 2850 lbs empty	
DYNAMIC	**HEIGHT:** 25'	**WIDTH:** N/A	**DIAMETER:** N/A
	DEPTH: N/A	**WEIGHT:** 3,250 lbs fully loaded	
	TRAILER: N/A		

FASTENER SCHEDULE: Torque all grade 5 bolts (dry): 3/8" bolts not over 31 foot lbs, 7/16" bolts not over 50 foot lbs; ½" bolts not over 75 foot lbs; ¾" bolts not over 265 foot lbs; 1" bolts not over 600 foot. lbs; 1-¼" bolts not over 1120 foot lbs.

LOAD DISTRIBUTION PER FOOTING: N/A
ELEMENTS AND STRUCTURES: N/A
MAXIMUM STATIC DESIGN LOADS PER FOOTING: N/A
MAXIMUM DYNAMIC DESIGN LOADS PER FOOTING: N/A
OTHER STRUCTURAL INTERFACE DESIGN SPECIFICATIONS: N/A

CARNYTOWN.COM

SECTION THREE: Operations Manual

2. GENERAL DESCRIPTION (cont.)

(b) Ride/Attraction Specifications

ASTM F 698-88 SPECIFICATION SHEET: 5 Seat Ride

RIDE ATTRACTION NAME: Rodeo Rider™
MANUFACTURER: S&S Original Amusements Inc.
MANUFACTURE DATE: See ID tag located on base unit
MODEL NUMBER: Rodeo Rider™ Stationary
SERIAL NUMBER: See ID tag located on base unit
RIDE SPEED: 3 mph **DIRECTION OF TRAVEL:** Vertical
PASSENGER WEIGHT: Minimum: 0 lbs Maximum: 400 lbs
PASSENGER CAPACITY: 5
RIDE DURATION: 90 seconds **BALANCING:** Within 100 lbs
ENVIRONMENTAL RESTRICTIONS: Do not operate in high winds or electrical storms.
PASSENGER RESTRICTIONS: Passengers must fit properly in restraint systems.
ELECTRICAL POWER RESTRICTIONS: 220V, 1 phase, 50 amp, 50Hz/60Hz
MECHANICAL POWER REQUIREMENTS: N/A
WATER FLOW: N/A

STATIC	**HEIGHT:** 25'	**WIDTH:** 8'-6'	**DIAMETER:** N/A
	DEPTH: 8'	**WEIGHT:** 2850 lbs empty	
DYNAMIC	**HEIGHT:** 20'	**WIDTH:** N/A	**DIAMETER:** N/A
	DEPTH: N/A	**WEIGHT:** 3,250 lbs. fully loaded	
	TRAILER: N/A		

FASTENER SCHEDULE: Torque all grade 5 bolts (dry): 3/8" bolts not over 31 foot lbs, 7/16" bolts not over 50 foot lbs; ½" bolts not over 75 foot lbs; ¾" bolts not over 265 foot lbs; 1" bolts not over 600 foot lbs; 1-¼" bolts not over 1120 foot lbs.

LOAD DISTRIBUTION PER FOOTING: N/A
ELEMENTS AND STRUCTURES: N/A
MAXIMUM STATIC DESIGN LOADS PER FOOTING: N/A
MAXIMUM DYNAMIC DESIGN LOADS PER FOOTING: N/A
OTHER STRUCTURAL INTERFACE DESIGN SPECIFICATIONS: N/A

CARNYTOWN.COM

SECTION FOUR: Personnel and Duties

2. CONTROL OPERATOR POSITION

A. The ride's control operator is responsible for control operation at the control pendant.

B. Sit or stand directly in front or slightly off to 1 side of the ride seating. Make sure you are able to see the riders at all times.

C. The operator at the control pendant must give undivided attention to ride operation at all times. In no case may the operator leave the control pendant while the ride is running.

D. Prior to starting the ride, be sure all personnel and guests are clear from ride in safe positions. If conditions are unsafe, the operator should wait until a safe condition exists before continuing.

E. Guests may not enter ride with food, beverages, plush, glass, or any other loose items.

F. Ensure that guests do not attempt to sit on or lean over the gates or line area railings. Enforce this and other restrictions for their safety.

G. **Do not** permit guest, for any reason, to move past the gates or safety line until it is their turn to ride.

H. Lead all guests to be seated and assist them if needed.

I. Pull the restraint lock pin (unlock) and rotate the restraint bar down until the pin locks the bar in the lower position. Visually inspect all passengers for correct rider position. Recheck the restraints by pushing down and then trying to pull the restraint bar back up. If the restraint does not function properly, do not operate the ride.

J. If a loading problem arises which requires the restraints to be unlocked during the loading process, recheck the restraints.

K. Respond courteously and attentively to all guest inquiries.

L. The control operator must have visual contact will all passengers before starting the ride.

CARNYTOWN.COM

SECTION FOUR: Personnel and Duties

3. CONTROL OPERATOR'S SPIELS

Loading:

"Welcome to the Rodeo Rider™. Please do not enter the ride with any loose articles. Please seat yourself quickly but carefully. When all passengers are seated and facing forward, I will lower the lap bar. The lap bar system will latch as soon as the restraint is lowered down. Here we go—enjoy your ride."

Unloading:

"Welcome back. When the ride comes to a full and complete stop, I will unlock and raise the lap bar. Please follow the exit sign. Thank you for riding the Frog Hopper™/Rodeo Rider™!"

Short-term down time:

"Ladies and gentlemen, at this time the Frog Hopper™/Rodeo Rider™ has temporarily ceased operation. We will inform you of the time of restart as soon as possible. We apologize for any inconveniences. Thank you."

Long-term down time:

"Ladies and gentlemen, we regret to inform you that the delays we are experiencing will be lengthy. Please exit the ride. A host/hostess will be near to help assist you if necessary. We apologize for any inconvenience."

CARNYTOWN.COM

SECTION FIVE A: Operating Procedures

1. PRE-OPENING CLEANING

A. Sweep all floors including stairs, ramps, and line areas.

B. Clean all trash cans on and around the ride.

C. Examine the seats for dirt, debris, and/or damage.

D. Special cleaning projects include:

1. Scraping gum from the platform, stairs or walls.
2. Removing any graffiti from the area.
3. Cleaning the line area railing.

CARNYTOWN.COM

SECTION FIVE A: Operating Procedures

2. PRE-OPENING SAFETY CHECKLIST

♦ ***Items must be checked "yes" before ride can be opened.***

A. Has maintenance has signed the 24 hour/shift change inspection sheet?
B. Are the fire extinguishers are in place?
C. Do the ride phones operate properly, and is the PA system operational?
D. Are all signs are in place and legible?
E. Are all line area railings, gates, and chains in place and free of rough, jagged edges with the chains hooked properly for opening?
F. Are the entrance and exit ramp/stairs in good condition and clear of obstructions?
G. Are the rides free of visible defects?

Notes: _____

Authorized Personnel: _____

Date: _____ Time: _____

CARNYTOWN.COM

SECTION FIVE A: Operating Procedures

3. SCHEDULED CLOSING OF THE RIDE

A. Accommodate all guests waiting in line at the scheduled closing time of the ride. (Do not let new arriving guests enter the line.)

B. Check that passengers are not occupying any of the seats.

C. Make sure the ride system is turned off.

D. Make sure the restraint bar is down and latched.

E. Make sure the on-ride circuit breakers are turned off.

F. Make sure all electrical components are turned off.

G. Make sure all logs have been completed.

CARNYTOWN.COM

SECTION FIVE B: Planned/Unplanned Downtime and Unloading Procedures

- Predetermined ride closure is called planned downtime. Please follow the scheduled closing procedures.

- **CAUTION: In the event of an electrical power failure, the ride retains the ability to actuate when the up or down buttons located on the control pendant are pushed.**

When unplanned downtime occurs, the following procedures should be adhered to:

1. Stop the operation.
2. Notify the operations office immediately.
3. Unload the ride. If the passenger cart is not located in the load/unload position, the hydraulic spool valve must be manually actuated to lower the seat.This operation will require 2 operators. Locate 1 operator at the control pendant who has direct visual contact with passengers. Use the other operator to manually operate the hydraulic spool valve. Using a 1/8" screwdriver tip or equivalent, press in the manual release plug located on the spool valve end. The fluid flow through the valve is controlled.

CARNYTOWN.COM

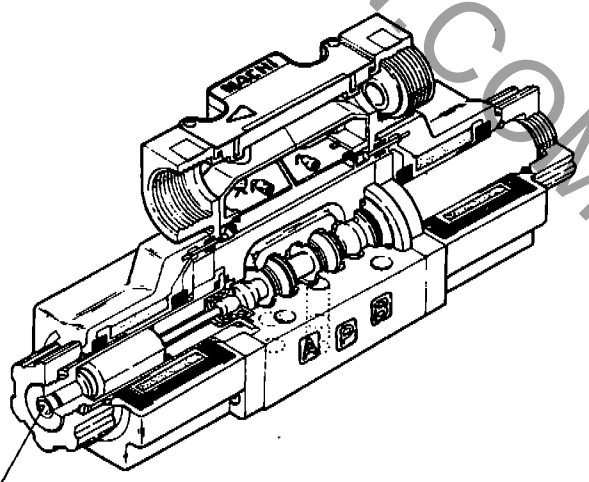

MANUAL RELEASE

SECTION FIVE B: Planned/Unplanned Downtime and Unloading Procedures

4. Remain in positions until directed elsewhere by a supervisor.

5. Explain to guests that the ride will be reopened as soon as possible.

6. When talking with guests, do not be specific concerning the nature of any problem unless caused by a guest misbehavior.

7. Record the reason and the time of stopping the operation.

8. Unless maintenance personnel have confirmed that the downtime will be momentary, **do not** give a time estimate for the ride to be back in operation.

9. Operations and maintenance should decide whether the line area should be cleared.

10. If an operation was discontinued due to mechanical reasons, the ride should not be restarted without a maintenance mechanic's approval.

11. Record the time of restarting operations.

CARNYTOWN.COM

SECTION FIVE B: Planned/Unplanned Downtime and Unloading Procedures

EMERGENCY UNLOADING PROCEDURES

When it becomes necessary to evacuate guests from the ride due to an emergency, these procedures should be followed.

1. ***Dispatch area evacuation***

2. If the ride has been activated, wait until it comes to a complete stop.

3. Unload the ride as quickly and safely as possible. See *Planned/Unplanned Downtime and Unloading Procedures* for ride letdown procedures.

4. It is important to talk to the passengers if they cannot be immediately released. Tell them to remain calm and that they will be attended to shortly. Proceed in a calm and orderly manner.

5. Escort each set of passengers to the emergency exit. Continue until all passengers are evacuated.

6. Employees should escort the guests to the exits, and remain with them until they are clear of the emergency situation.

7. Notify operations office.

CARNYTOWN.COM

SECTION SIX: Safety

1. LOCK-OUT PROCEDURES

- See the *Frog Hopper™/Rodeo Rider™ Maintenance Manual* for procedures.

OSHA LOCK-OUT RULING 1910.147

The employer shall provide training to ensure that the purpose and function of the energy control program are understood by employees, and that the knowledge and skills required for the safe application, usage, and removal of energy controls are acquired by employees.

The training includes the following areas:

A. Recognizing hazardous energy sources (7)(i)(A)

B. Purpose and use of the energy control procedure (7)(i)(B)

C. Prohibition relating to attempts to restart or re-energize machines or equipment which are locked-out or tagged out (7)(i)(C)

D. Limitations of tags (7)(ii)(A-F)

E. Employee training has been accomplished and is being kept up to date (7)(iv)

CARNYTOWN.COM

SECTION SIX: Safety

2. EMERGENCY PROCEDURES/GUIDELINES

A. *Injury*: In any injury situation, it is important that everyone on the crew remain calm.

(1) Minor injury: A minor injury is one in which a guest can walk to First Aid under his or her own power without pain or further aggravation of the injury.

(a) The person in charge of the ride must be notified immediately.

(b) Ask the guest (or parent if the injured party is a child) if they would like to go to First Aid. ***Caution***: refrain from using leading questions such as, "Are you hurt?" Instead, use, "May I help you?"

(c) If the guest would like to go to First Aid and is able to walk, the lead/foreman will designate a host/hostess to walk with them there.

♦ **Note:** If a guest requests First Aid, and, because of the ride's staffing requirements an escort cannot be given, First Aid should be informed so one of their personnel can come and escort the injured guest to First Aid.

(2) If the guest does not wish an escort, give directions to First Aid.

(3) Make sure all incident reports are properly completed.

(4) No crewmember will discuss the incident with any guest or employee except the person in charge of the ride and a supervisor.

(5) The person in charge of the ride must call the operations office to notify the supervisor if necessary.

B. Major Injury: A major injury is one in which a guest cannot walk to First Aid under his or her own power without pain or further aggravation of the injury.

(1) The person in charge of the ride must be notified immediately.

(2) Do not panic. Panic will only delay taking care of the situation.

(3) If the injured guest is in a position that prohibits safe operation of the ride, the person in charge should close the ride.

(4) Call First Aid, stating your name, the exact location of the incident, and the nature of the injury. Do not hang up until it is clear that First Aid has understood and will act upon the message.

CARNYTOWN.COM

SECTION SIX: Safety

2. EMERGENCY PROCEDURES/GUIDELINES (cont.)

(5) Call the operations office to notify the supervisor of the situation.

(6) Do not move an injured guest unless it is necessary for their continued safety.

(7) Call security if crowd control is needed.

(8) All staff must hold their positions until a supervisor, security, or First Aid attendant arrives. Inform him/her of the nature of the injury and offer assistance as required. First Aid is in charge of the situation upon arrival at the scene.

(9) Obtain names and phone numbers of any witnesses and note any pertinent facts for use in later completing an incident report. Do not fill out an incident report or make comments about the incident in the presence of a guest.

C. *Fire*

1. Minor Fire: A minor fire is one in which there is danger to equipment, but only a minor danger to guests or employees and can be extinguished with hand-held fire extinguishers.

   (a) The crew should attempt to extinguish the fire with the appropriate fire extinguisher.

   (b) The person in charge of the ride must be notified immediately.

   (c) All guests must be moved to a position that affords them the most safety. This may include unloading the guests and closing the ride. Each fire situation will be different and should be dealt with accordingly.

   (d) Call First Aid if there is any indication that an injury may result from the problem.

   (e) Call operations to notify the supervisor of the problem.

   (f) Remain in control of the situation until security personnel or a supervisor arrives.

   (g) Consult maintenance to determine possible damage to the ride or its controls before continuing operation

   (h) Gather information for an incident report.

CARNYTOWN.COM

SECTION SIX: Safety

2. EMERGENCY PROCEDURES/GUIDELINES (cont.)

2. Major Fire: A major fire is one in which a severe danger to guests, crew members or equipment exists.

   (a) The person in charge of the ride must be notified immediately.

   (b) All guests must be moved to the position that affords them the most safety. Most likely this will require emergency unloading of the ride.

   (c) The person in charge of the ride must notify the fire department and the appropriate emergency personnel (security, First Aid, and operations).

   (d) The crew should attempt to extinguish the fire using the appropriate fire extinguishers unless such an effort would be futile and dangerous. At no time should fire fighting efforts be made if they would jeopardize employee or guest safety.

   (e) Follow the instructions of emergency personnel.

   (f) All staff must assist in crowd control until the situation has been resolved.

   (g) Gather information for an incident report.

   (h) Consult an authorized maintenance mechanic or S&S Original Amusements, Inc. about possible damage to the ride.

CARNYTOWN.COM

SECTION SIX: Safety

3. GUEST(S) WITH DISABILITIES

Guest(s) confined to a wheelchair and/or physically unable to safely or comfortably negotiate the line area may enter the ride exit. Those guests, or a member of their party, should contact a ride host/hostess for instructions prior to doing so.

The extent of the guest's physical limitations should be determined. If there is any questions as to the advisability of allowing the guest to ride, a lead/foreman or supervisor should be called to make the decision.

If it is decided that the guest can safely ride, a load/unload host/hostess should coordinate the loading process for the disabled guest and their party.

The host/hostess should assist in any way possible, except for the physical movement of the disabled guest (*i.e.*, moving crutches or wheelchair out of the way).

- ***Do not physically handle any disabled guest.***

CARNYTOWN.COM

SECTION SEVEN: Important Office Locations and Phone Numbers

Special Services	Location	Phone Number
Emergency:		
First Aid:		
Security:		
Guest Relations:		
Operations Office:		

CARNYTOWN.COM

S&S Original Amusements	**Logan, Utah, USA**	**Ph. (435) 752-1987**

NOTES

CARNYTOWN.COM

NOTES

CARNYTOWN.COM

NOTES

CARNYTOWN.COM

SECTION FOUR: Personnel and Duties

1. CONTROL OPERATOR RESPONSIBILITIES

Pre-Opening:

A. Verify that the ride has been signed off by maintenance. Do not operate the ride until your sign-off sheet has been completed.
B. Ensure that all scheduled cleaning has been completed.
C. Inspect the line area. If auxiliary line area is necessary, be prepared to set it up in appropriate locations.
D. Complete all pre-opening procedures prior to scheduled opening time.
E. If for some reason the ride is not operational at opening time, report the ride as being "down" to the operations office.

Opening/Operating:

A. Update the daily operations report.
B. Make sure the ride area is clean and trash free at all times.
C. Close the ride at the proper time.
D. Test rides:
   (1) A test ride must be completed by the control operator daily.
   (2) During the test ride, be aware of all aspects of the unit's operation through the ride course. If anything unusual is apparent, (*i.e.*, strange noises, vibrations, etc.), follow unplanned down time procedures.
   (3) Test rides during operating hours may be done with the guests. The control operator is responsible for his/her ride at all times. When the control operator must be away from the ride, another responsible control operator must be designated to the ride. At all times, every member of the operation must know who is in charge of the ride.
E. The control operator is responsible for handling general guest complaints. In handling guest complaints, the control operator will listen and consider that the guest would not bother verbalizing the problem unless it seemed serious to him/her. Rectify all guest-related problems as soon as they are brought forward. The more time that elapses before a solution is reached, the more complex the situation becomes. In the event the control operator cannot satisfy the guest, contact a supervisor.

- ***There are most likely other passengers who should not ride due to various disabilities beyond any simple guidelines. The decision as to whether they are able to ride or not is solely up to the owner or operator of the ride.***

CARNYTOWN.COM

SECTION FOUR: Personnel and Duties

2. CONTROL OPERATOR POSITION (cont.)

M. When conditions permit safe ride activation, push ride *Start* button located on control pendant to activate ride control.

- **Note: Anytime during the ride you may press the *stop* button to cease the ride in progress.**
- **Press the *stop* button a second time to lower the seat to load/unload position.**

N. While the ride is in motion, remain within the *safety zone*. This zone keeps distance between yourself and the moving seat.

O. Upon completion of the ride cycle assist passengers, if necessary, in safe exiting procedures.

P. As a ride cycle ends and the ride comes to a complete stop, the control operator should open the exit gate.

Q. When the gates open to admit oncoming riders, monitor the loading to ensure that guests load correctly and evenly.

R. In the event that all line areas are being used and the guest line extends into pedestrian or other traffic, portable barricades should be setup to organize the line.

S. Please remove and store barricades as soon as they become unnecessary.

T. If a guest does not meet size requirements, advise him/her that s/he will not be able to ride.

U. Keep the flow of guests into the loading area as constant and even as possible. Try to have a full load lined up and ready to begin again after each ride is loaded.

CARNYTOWN.COM

SECTION THREE: Operations Manual

2. RIDE DESCRIPTION

This page is not intended to provide precise or complete engineering or mechanical information. It is only to be used for conceptualization and basic understanding.

The Frog Hopper™/Rodeo Rider™ is a vertical ascent and bounced descent amusement ride. It provides seats and a restraint system in which the passengers are slowly lifted approximately 18' vertically and then lowered in a hopping motion. The complete cycle is then repeated 2 times. The final cycle returns the passengers to the load/unload position.

A typical ride cycle is as follows:

- After the passengers are seated the operator lowers the lap restraint bar which automatically locks into the closed position.
- The operator initiates the automatic ride control via a remote hand-held pendant.
- A valve then opens allowing hydraulic cylinders to retract a cable pulley system attached to the cart-seat assembly. This raises the passenger cart to the top of the boom structure.
- A sensor then directs the hydraulic valve system to throttle between open and closed—creating a bouncing effect for the passengers. The smoothness of the bounce results from allowing the hydraulic pressure to expand hydraulic hoses located in the boom structure.
- The ride controller repeats the cycle 3 times.
- At the end of the final cycle the passenger cart closes the valve, diverting hydraulic fluid through a flow control valve. This produces a very slow return to the load/unload position.
- The operator unlocks the restraints and raises the lap restraint bar, locking it into the open position. The actual ride lasts about 1½ minutes with a full cycle time (with passenger loading and unloading) of 2–3 minutes.

CARNYTOWN.COM